RCL425024

Weidmüller Interface GmbH & Co. KG
Klingenbergstraße 26
D-32758 Detmold
Germany

www.weidmueller.com

Product image

Similar to illustration

Individual relays for TERMSERIES
- Electromechanical relays
- Different contact materials

General ordering data

Version	TERMSERIES, Relay, Number of contacts: 2, CO contact AgNi gold-plated, Rated control voltage: 24 V DC, Continuous current: 8 A, Plug-in connection, Test button available: No
Order No.	4058580000
Type	RCL425024
GTIN (EAN)	4032248269129
Qty.	20 pc(s).

Weidmüller

RCL425024

Weidmüller Interface GmbH & Co. KG
Klingenbergstraße 26
D-32758 Detmold
Germany

www.weidmueller.com

Technical data

Dimensions and weights

Depth	15.7 mm	Depth (inches)	0.618 inch
Height	29 mm	Height (inches)	1.142 inch
Width	12.7 mm	Width (inches)	0.5 inch
Net weight	0.6 g		

Temperatures

Storage temperature	-40 °C...85 °C	Operating temperature	-40 °C...70 °C
Humidity	40 °C / 93 % rel. humidity, no condensation		

Probability of failure

B10	80.000 AC15: 250Vac/2.5A

Environmental Product Compliance

REACH SVHC	4,4'-isopropylidenediphenol 80-05-7

Rated data UL

Certificate No. (cURus)	E224238

Control side

Rated control voltage	24 V DC	Rated current DC	16.7 mA
Power rating	400 mW	Pull-in/drop-out voltage, typ.	16.8 V / 2.4 V DC
Coil resistance	1440 Ω ± 10 %		

Load side

Rated switching voltage	250 V AC	Continuous current	8 A
Max. switching frequency at rated load	0.1 Hz	Min. switching power	1 mA @ 1 V
Inrush current	15 A / 4 s	AC switching capacity (resistive), max.	2000 VA
DC switching capacity (resistive), max.	192 W @ 24 V	Switch-on delay	≤ 8 ms
Switch-off delay	≤ 6 ms	Contact type	2 CO contact (AgNi gold-plated)
Mechanical service life	30 x 10^6 switching cycles		

General data

Test button available	No	Mechanical switch position indicator	No
Colour	Transparent	UL 94 flammability rating	V-2

RCL425024

Weidmüller Interface GmbH & Co. KG
Klingenbergstraße 26
D-32758 Detmold
Germany

www.weidmueller.com

Technical data

Insulation coordination

Rated voltage	250 V	Pollution severity	2
Surge voltage category	III	Insulating material group	IIIa
Clearance and creepage distances for control side - load side	≥ 10 mm	Dielectric strength for control side - load side	5 kV_{eff} / 1min
Dielectric strength of neighbouring contacts	2.5 kV_{eff} / 1 Min.	Dielectric strength of open contact	1 kV_{eff} / 1 min
Protection degree	IP20		

Further details of approvals / standards

Standards	IEC 61810-1, UL508	Certificate No. (CSA)	249409-2426937
Certificate No. (VDE)	40020589	Certificate No. (cURus)	E224238

Connection data

Wire connection method	Plug-in connection	Pitch in mm (P)	5 mm

Classifications

ETIM 6.0	EC001437	ETIM 7.0	EC001437
ETIM 8.0	EC001437	ECLASS 9.0	27-37-16-01
ECLASS 9.1	27-37-16-01	ECLASS 10.0	27-37-16-01
ECLASS 11.0	27-37-16-01		

Approvals

Approvals	
ROHS	Conform
UL File Number Search	E224238

Downloads

Engineering Data	CAD data – STEP
Engineering Data	WSCAD
Catalogues	Catalogues in PDF-format
Brochures	

RCL425024

Weidmüller Interface GmbH & Co. KG
Klingenbergstraße 26
D-32758 Detmold
Germany

www.weidmueller.com

Drawings

Wiring diagram

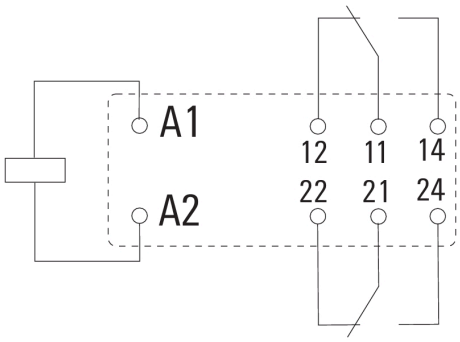

View of Pins from below

Graph

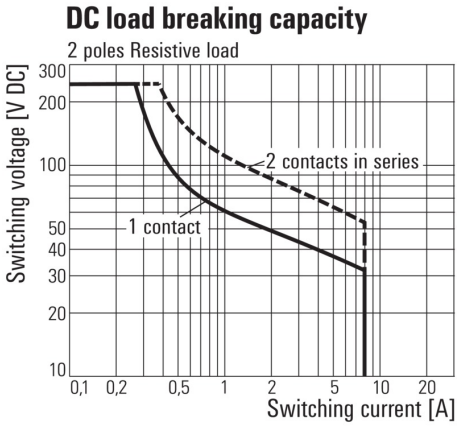

DC load limit curve
Resistive load

Graph

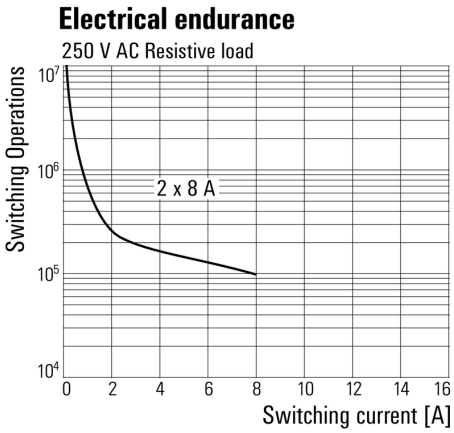

Electrical service life
250 V AC resistive load

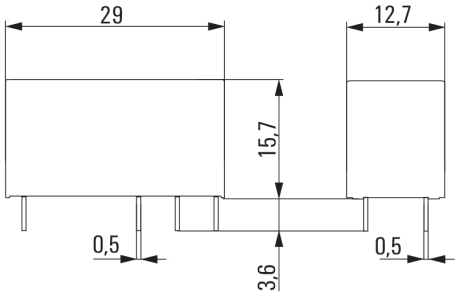

RCL425024

Weidmüller Interface GmbH & Co. KG
Klingenbergstraße 26
D-32758 Detmold
Germany

www.weidmueller.com

Drawings

Miscellaneous

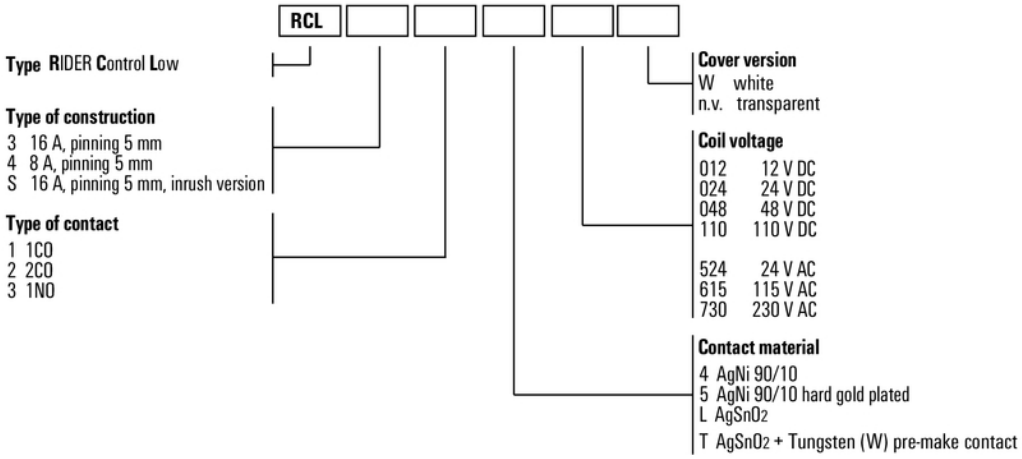

Type codes