OT3200-4000E

1SCC301082M0203 Document no. 34OT3200-4000 C

OT3200-4000

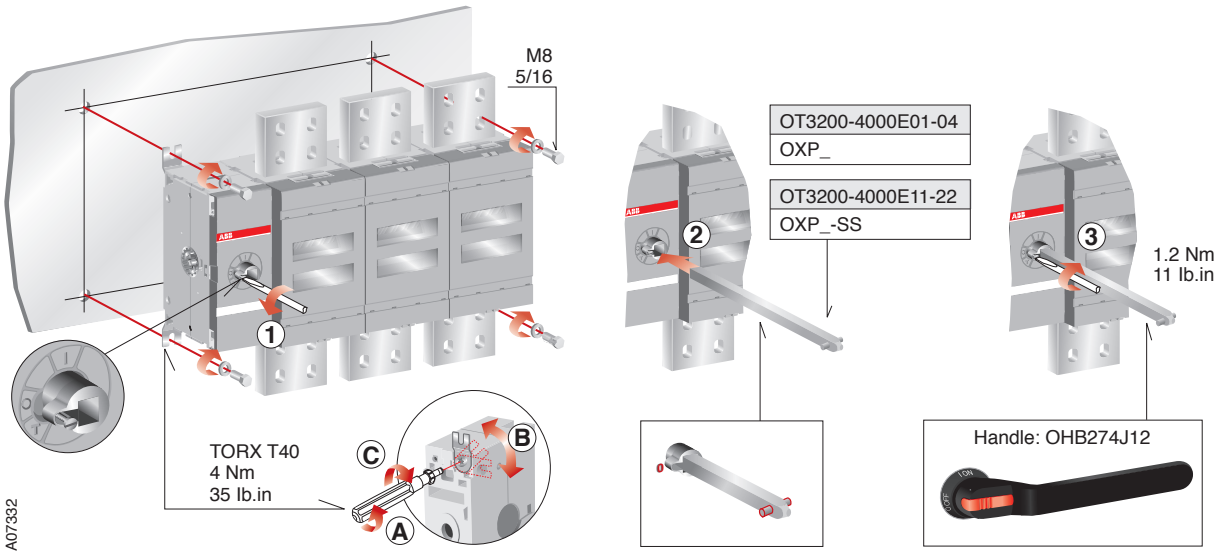

OT3200-4000E01-04

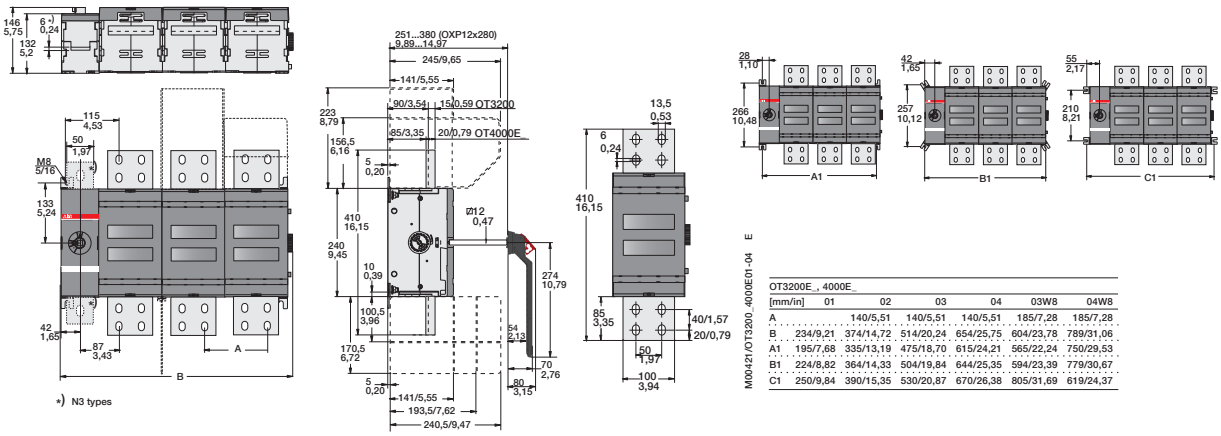

M00421/OT3200_4000E01-04 E

OT3200E_, 4000E_ [mm/in]	01	02	03	04	03W8	04W8
A	140/5,51	140/5,51	140/5,51	185/7,28	185/7,28	
B	234/9,21	374/14,72	514/20,24	654/25,75	604/23,78	789/31,06
A1	195/7,68	335/13,19	475/18,70	615/24,21	565/22,24	750/29,53
B1	224/8,82	364/14,33	504/19,84	644/25,35	594/23,39	779/30,67
C1	250/9,84	390/15,35	530/20,87	670/26,38	805/31,69	619/24,37

OT3200-4000E11-22

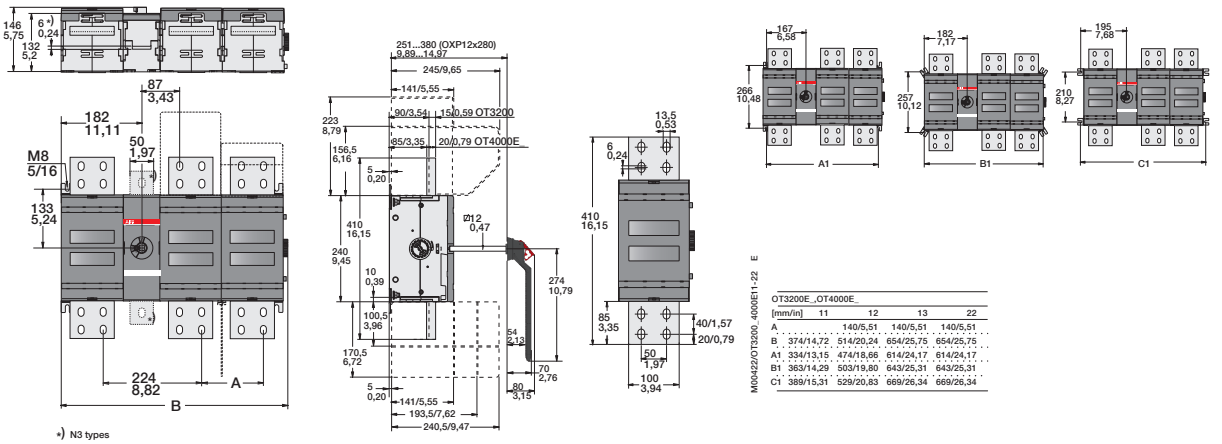

M00422/OT3200_4000E11-22 E

OT3200E_,OT4000E_ [mm/in]	11	12	13	22
A	140/5,51	140/5,51	140/5,51	
B	374/14,72	514/20,24	654/25,75	654/25,75
A1	334/13,15	474/18,66	614/24,17	614/24,17
B1	363/14,29	503/19,80	643/25,31	643/25,31
C1	389/15,31	529/20,83	669/26,34	669/26,34

OT3200-4000E

Label

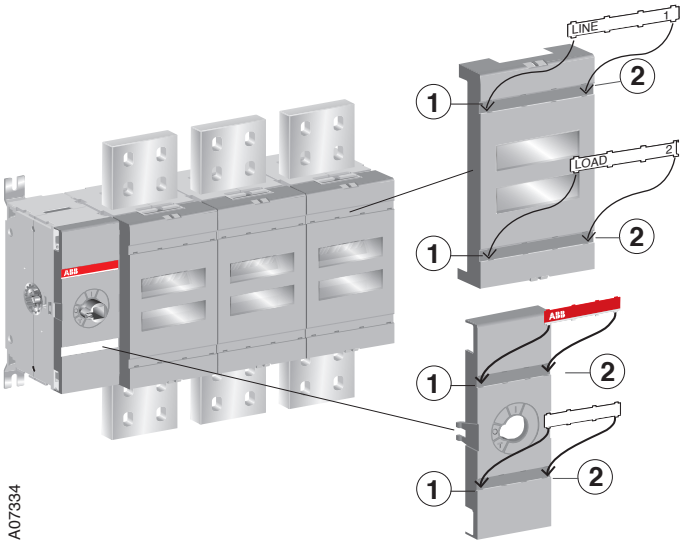

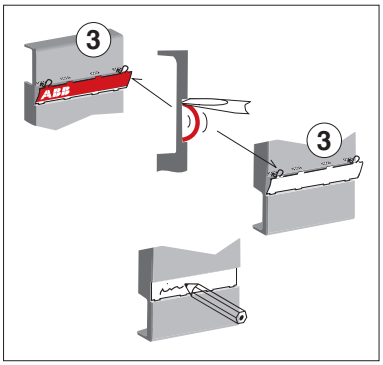

OTS_

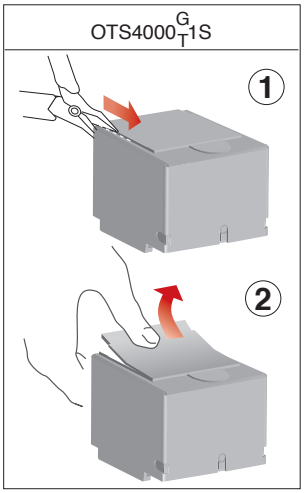

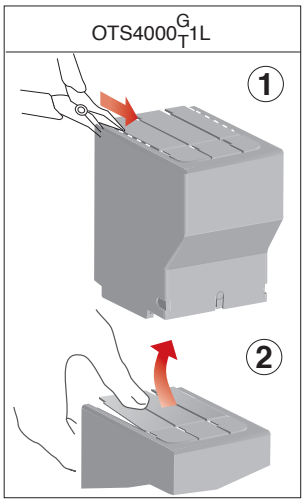

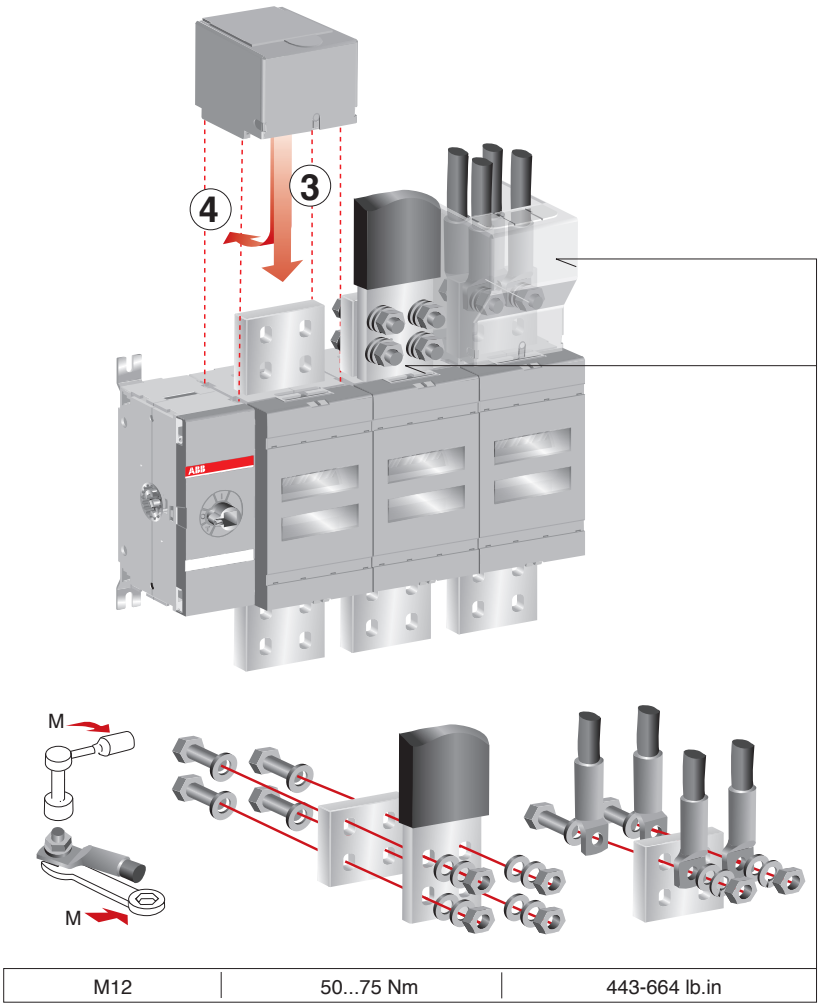

M12	50...75 Nm	443-664 lb.in

OT3200-4000E

Connections

OT3200

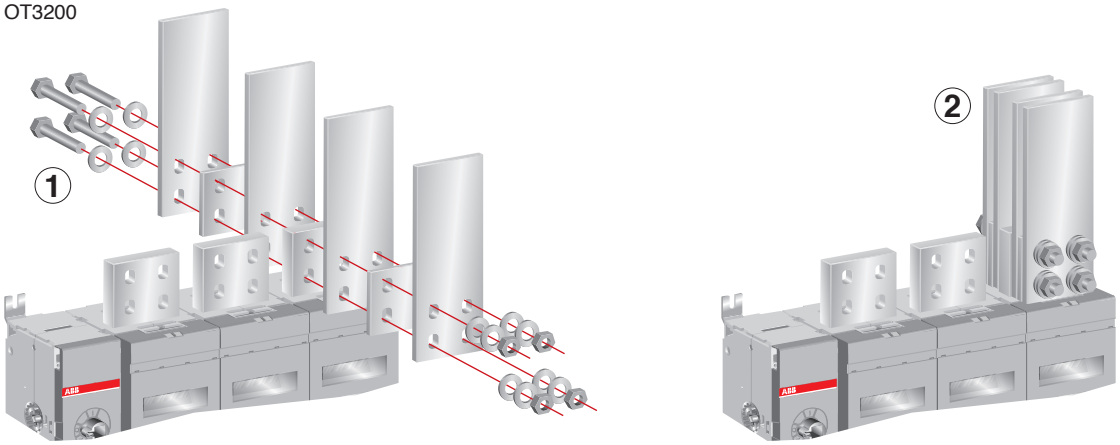

OT4000

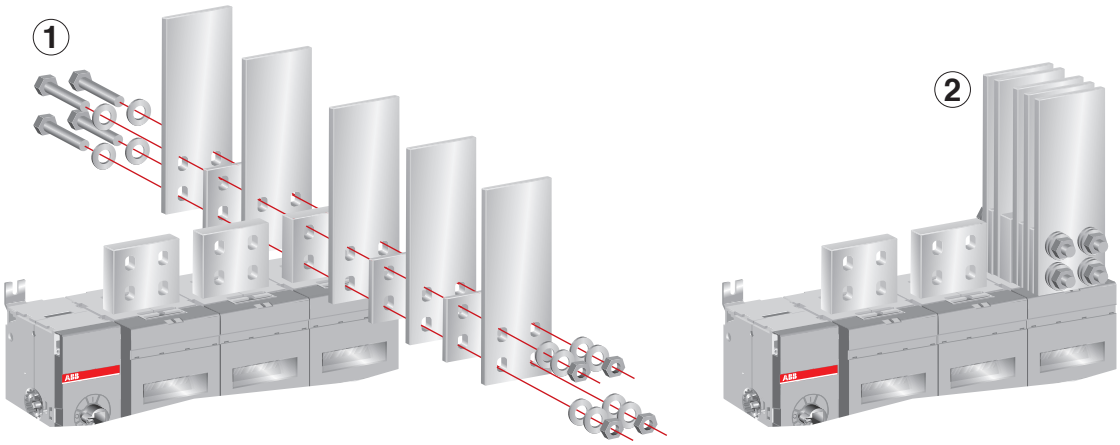

A07343

OZX_

OT3200-4000
OZXB3
OZXB4
OZXB5
OZXB6
OZXB7L

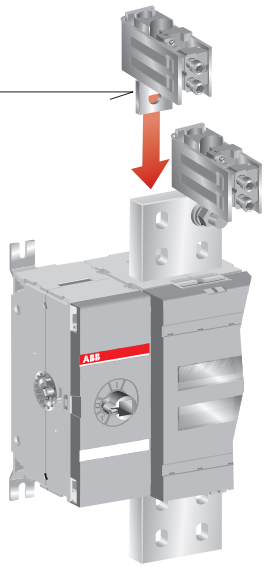

S07333

OT3200-4000E

OTB_

Type for package of 6 barriers is OTB4000/6.

Barriers CXBY69470 or shrouds must be used on all types at upper side

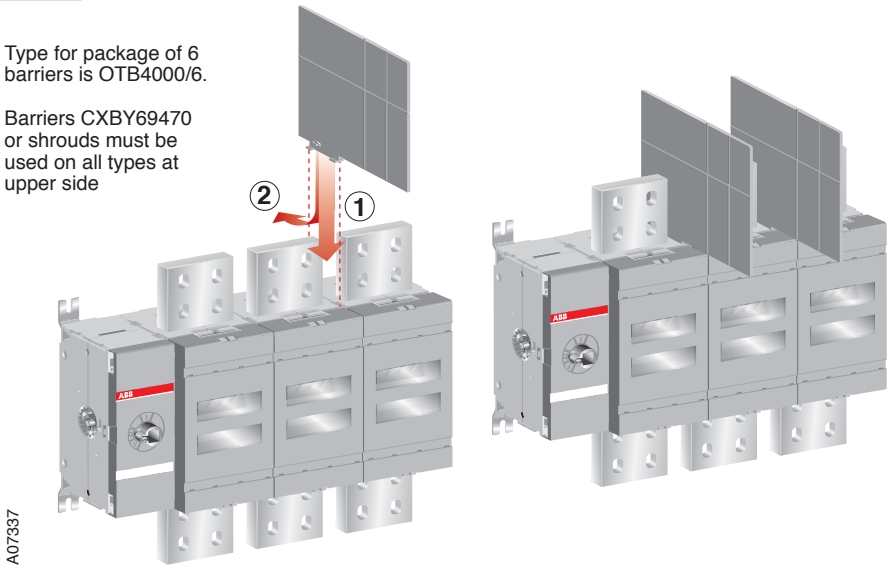

A07337

OEA28

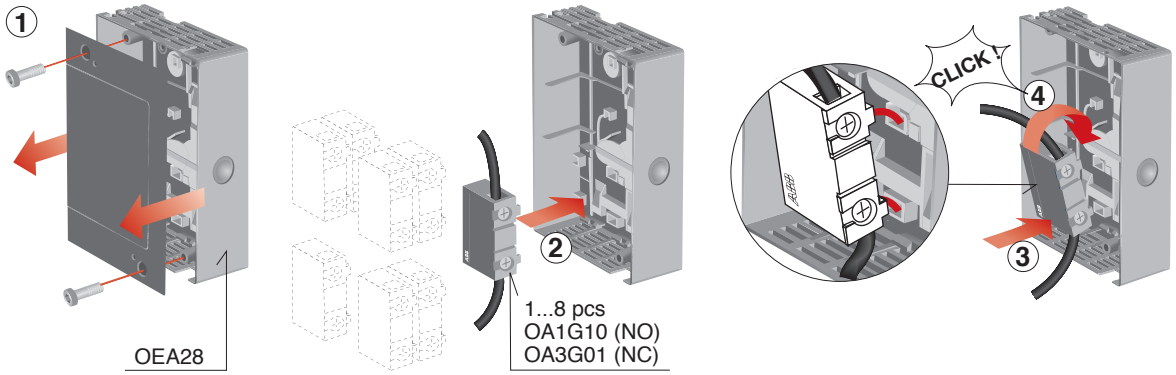

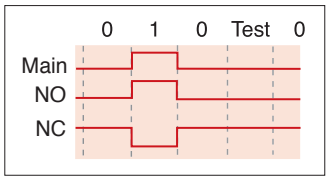

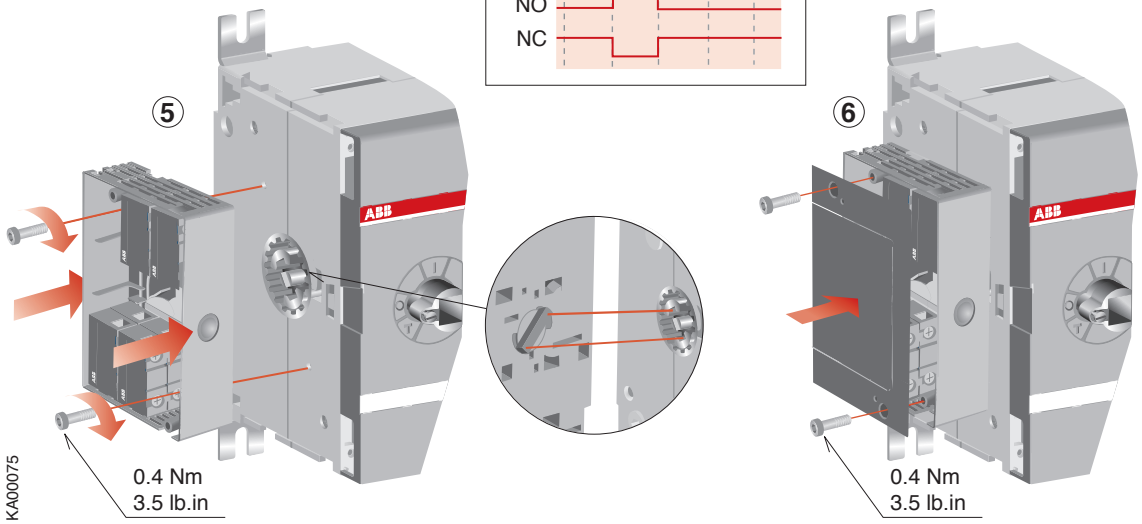

KA00075

OT3200-4000E

OTV_

OTV3200EK

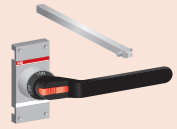

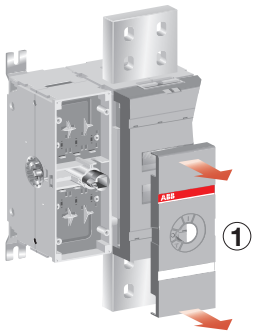

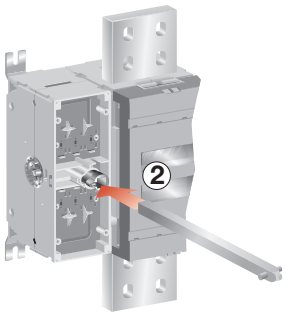

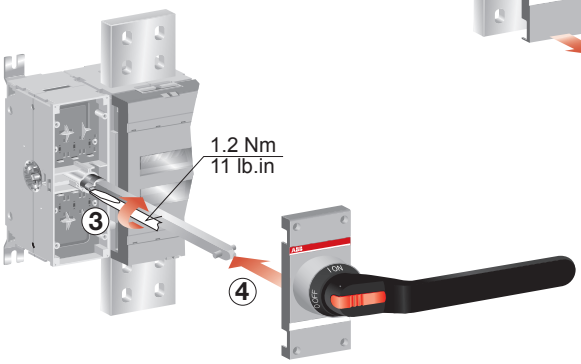

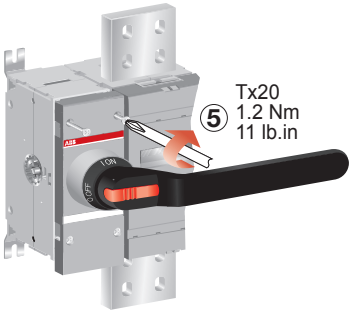

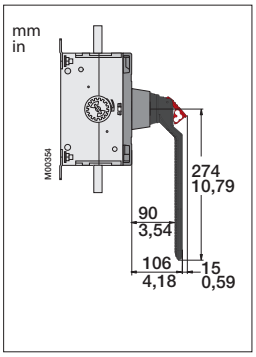

A07339

Note: Use protection against direct contact. For example:

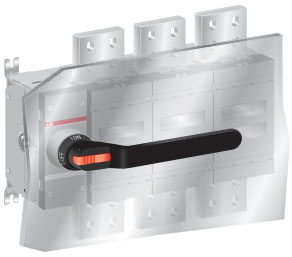

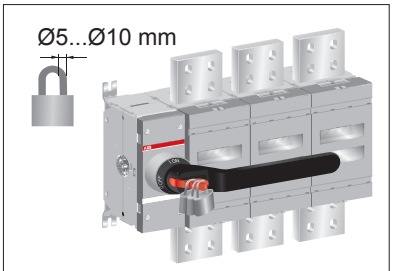

Control wiring

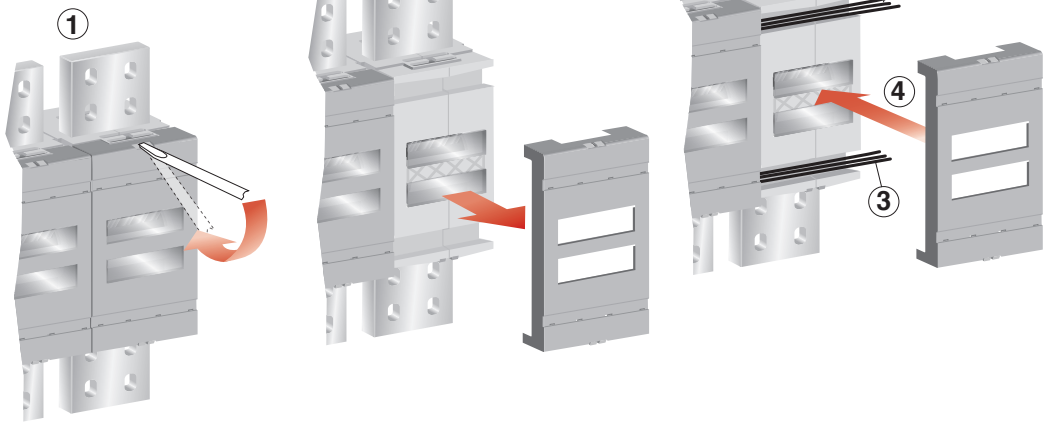

A07338

OT3200-4000E

OTZT4

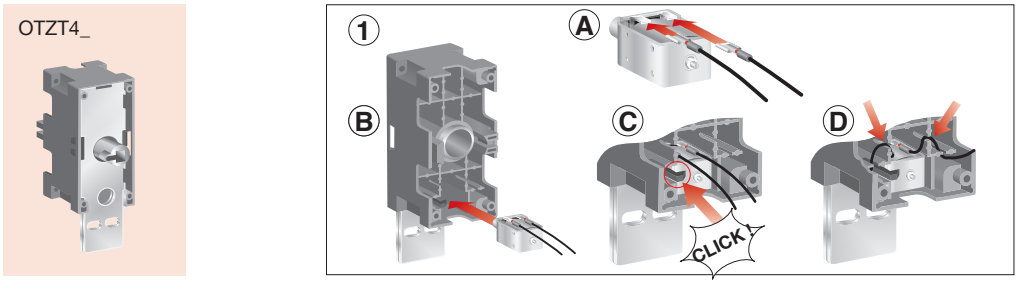

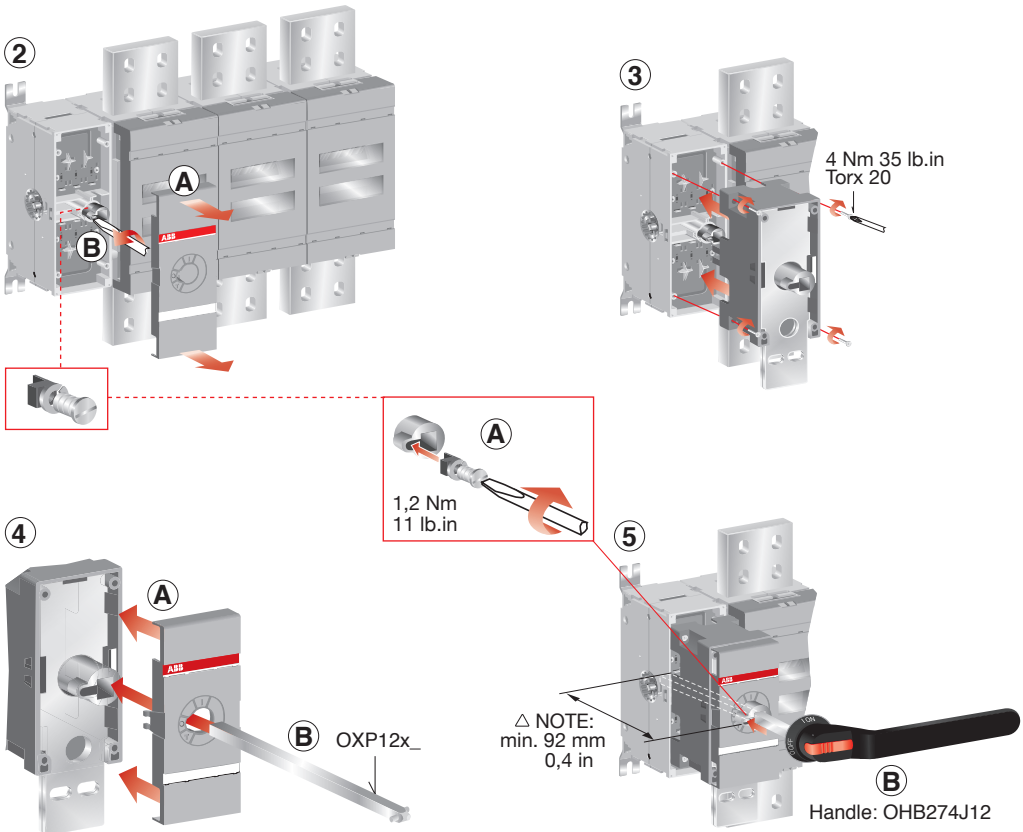

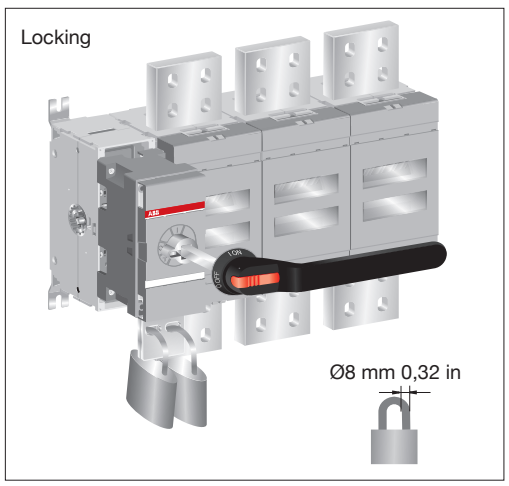

OT3200-4000E

OA_

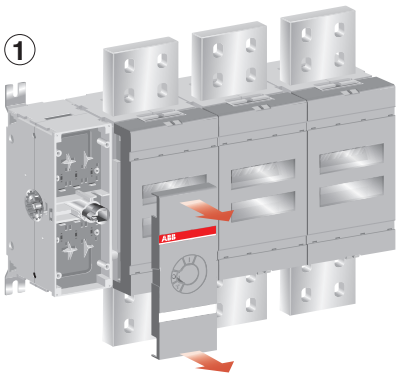

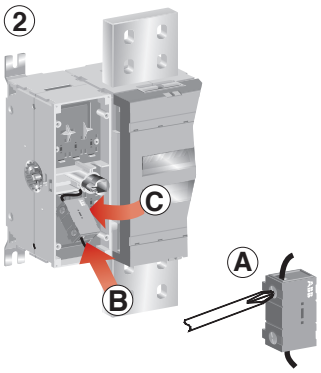

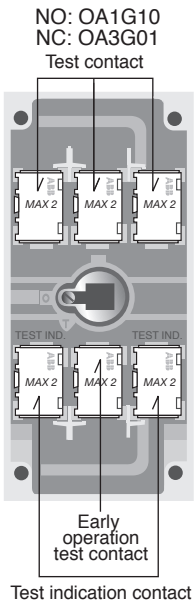

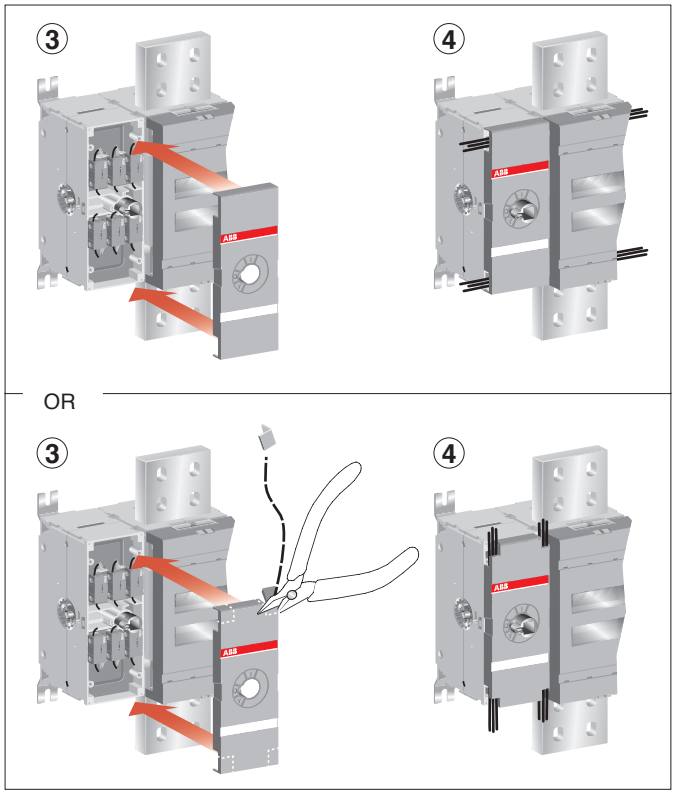

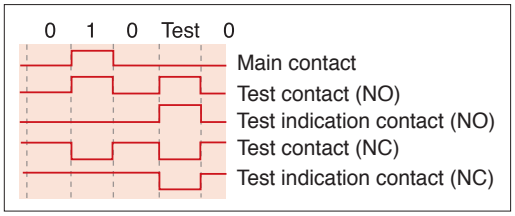

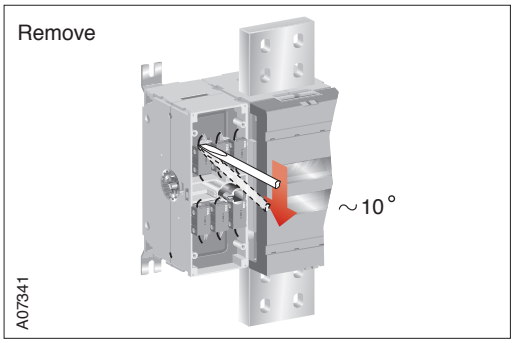

OT3200-4000E

OTZ4000E

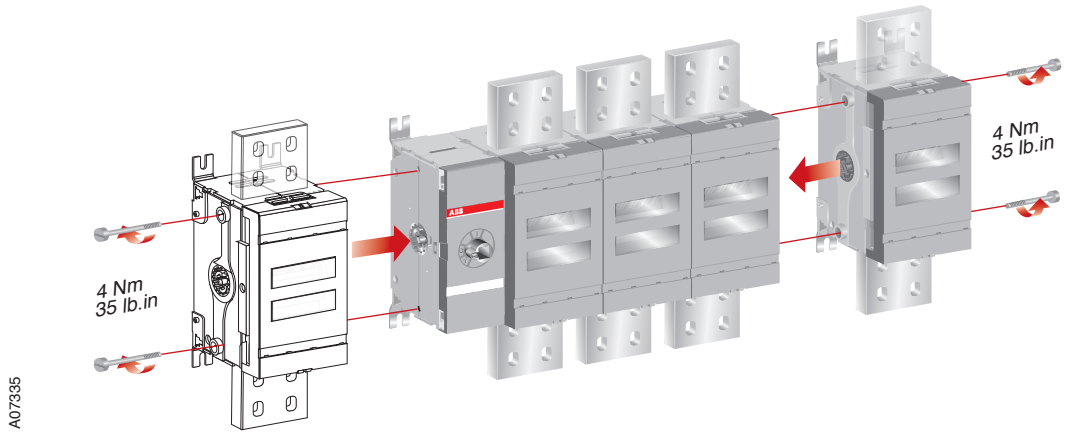

OT_N3 & OXN1250T

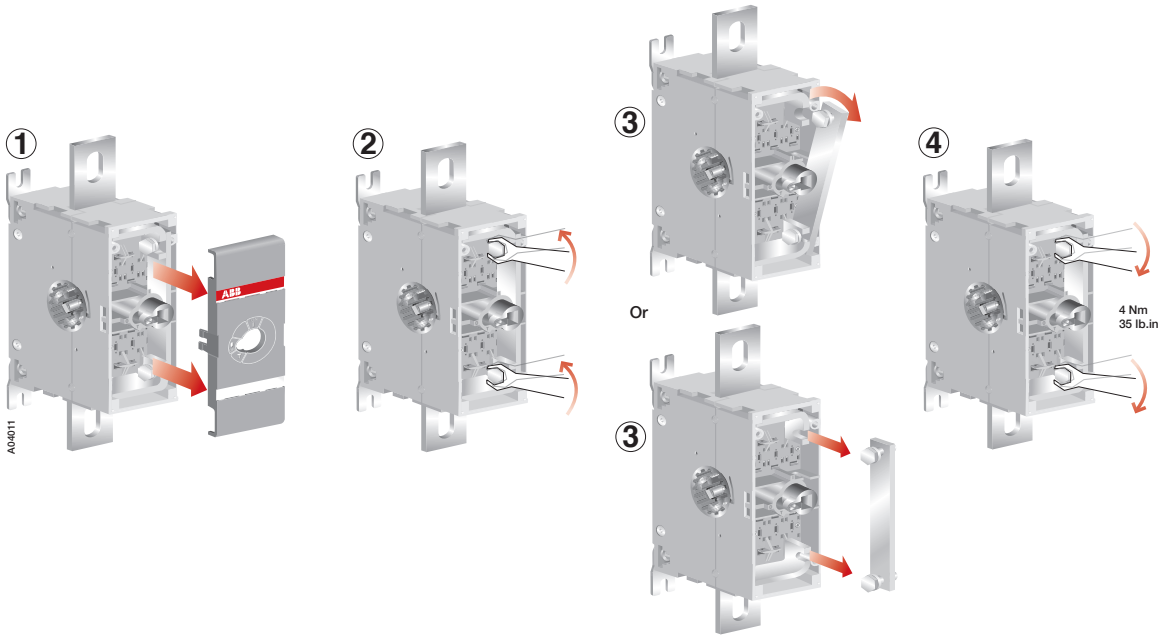

For more information please contact:

ABB Oy
Protection and Connection
P.O. Box 622, FI-65101 Vaasa, Finland
www.abb.com/lowvoltage

Power and productivity
for a better world™