MATERIAL NO.	ENGINEERING NO.	FINISHED LENGTH
1300080229	302002A01F030	3 FT. (0.91 M)
1300080234	302002A01F120	12 FT. (3.66 M)
1300080238	302002A01F200	20 FT. (6.10 M)

CABLE LENGTH TOLERANCES
<.3M [1FT]: +19mm-0 [+.75in-0]
.3 - .9M [1 - 3FT]: +44.5mm-0 [+1.75in-0]
.9 - 1.8M [3 - 6FT]: +55.6mm-0 [+2.19in-0]
1.8 - 3.7M [6 - 12FT: +88.9mm-0 [+3.50in-0]
3.7 - 7.3M [12 - 24FT]: +165.1mm-0 [+6.50in-0]
7.3-14.6M [24 - 48FT]: +317.5mm-0 [+12.50in-0]
14.6 - 30.5M [48-100FT]: +622.3mm-0 [+24.50in-0]
OVER 30M [100FT] +2% OF FINISHED LENGTH

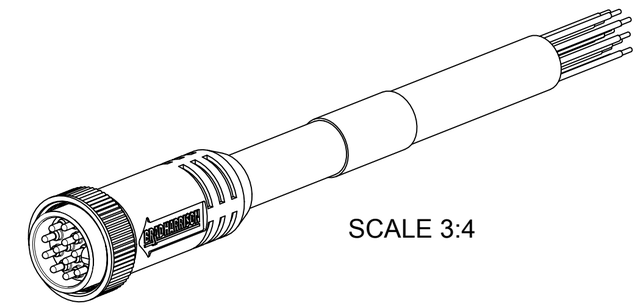

SCALE 3:4

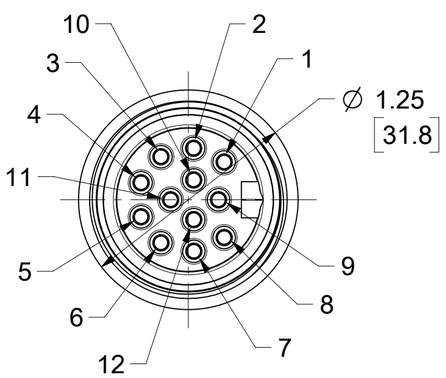

MALE FACE VIEW

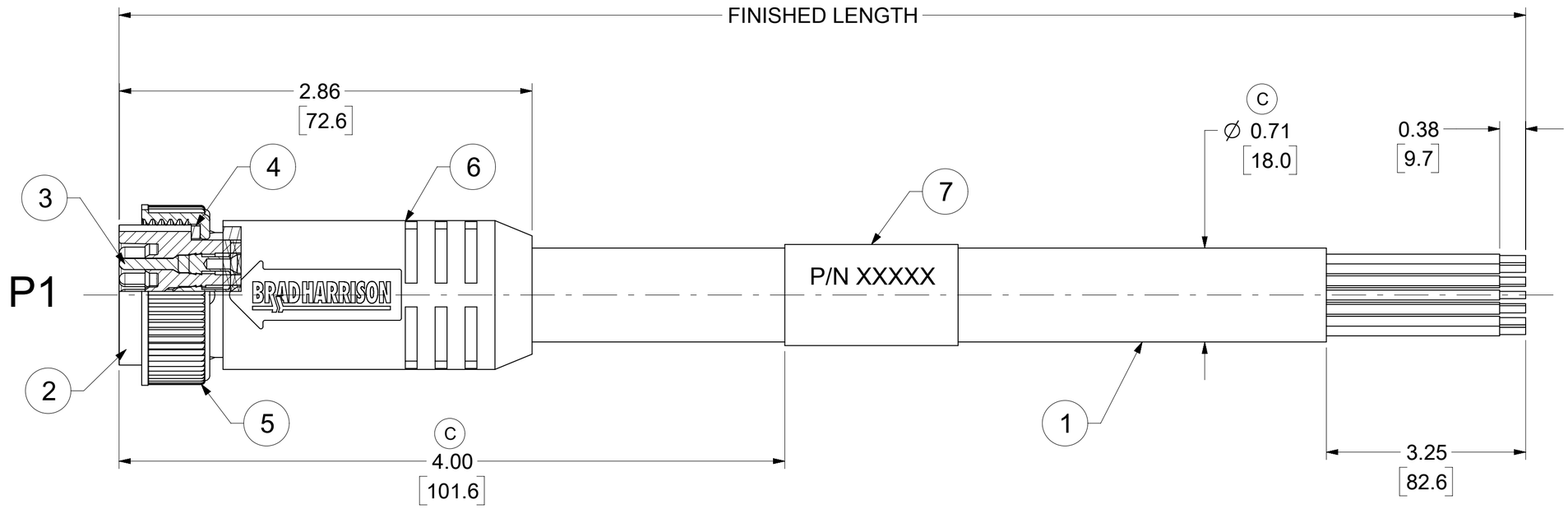

NOTES:
1. MATERIAL: AS NOTED
2. FINISH: AS NOTED
3. ELECTRICAL:
   VOLTAGE: 320V PER IEC60664
   600V PER UL2238
   CURRENT: 5A
4. TEMP RATING: -20°C TO +105°C
5. PROTECTION: IP67 (WHEN MATED)
6. CSA CERTIFIED FILE: LR6837
7. UL RECOGNIZED FILE: E152210
8. COUPLING THREAD: 1 1/8"-16UN
9. ASSEMBLY IS ROHS COMPLIANT
10. ALL DIMS ARE FOR REFERENCE UNLESS TOLERANCED OR NOTED OTHERWISE

WIRING DIAGRAM

P1	
1	ORANGE
2	BLUE
3	WHITE/BLACK TRACE
4	RED/BLACK TRACE
5	GREEN/BLACK TRACE
6	ORANGE/BLACK TRACE
7	BLUE/BLACK TRACE
8	BLACK/WHITE TRACE
9	GREEN/YELLOW TRACE GND
10	RED
11	WHITE
12	BLACK

PART NUMBER MATRIX

302002A01F030

FINISHED LENGTH
F001= .1 FT
F020= 2 FT
F200= 20 FT

ITEM	DESCRIPTION	MATERIAL	FINISH
7	LABEL	VINYL	BLACK/YELLOW
6	OVERMOLD	TPE	YELLOW
5	COUPLING NUT	ZINC DIE CAST	BLACK E-COAT
4	FRICTION RING	NYLON	NATURAL
3	PIN CONTACT	Cu ALLOY	GOLD OVER NICKEL
2	INSERT, MALE, 12 POLE	TPE	YELLOW
1	#16-12 CABLE,STOOW/ST	PVC JACKET	YELLOW

DOCUMENT STATUS	P1	RELEASE DATE	2021/08/27 14:24:17

THIS DRAWING CONTAINS INFORMATION THAT IS PROPRIETARY TO MOLEX ELECTRONIC TECHNOLOGIES, LLC AND SHOULD NOT BE USED WITHOUT WRITTEN PERMISSION

DIMENSION UNITS: INCH/MM
SCALE: 1.5:1
GENERAL TOLERANCES (UNLESS SPECIFIED)

	MM	INCH
4 PLACES	±	±
3 PLACES	±	±
2 PLACES	±	±
1 PLACE	±	±
0 PLACES	±	±
ANGULAR TOL	± 0.5 °	

DRAFT WHERE APPLICABLE MUST REMAIN WITHIN DIMENSIONS

CURRENT REV DESC: UPDATED ITEM #2,6,7, LABEL DIM. AND MATERIAL P/N TABLE . ADDED CSA, UL, IEC VOLT, TEMP RATING, IP RATING, TOL. CHART, PART NUMBER MATRIX AND CABLE DIA.

EC NO: 673727
DRWN: AKABADI 2021/06/24
CHK'D: RSTONE 2021/08/13
APPR: BWOODMAN 2021/08/27

INITIAL REVISION:
DRWN: BRUPERT 2009/08/24
APPR: JFMURPHY 2009/08/27

THIRD ANGLE PROJECTION | DRAWING: C-SIZE | SERIES: 130008

molex

MINI-CHANGE CORDSET, C SIZE
12 POLE, MALE, STRAIGHT, SINGLE KEY, 16AWG

PRODUCT CUSTOMER DRAWING

DOCUMENT NUMBER	DOC TYPE	DOC PART	REVISION
SD-130008-012	PSD	001	C

MATERIAL NUMBER	CUSTOMER	SHEET NUMBER
SEE TABLE	GENERAL MARKET	1 OF 1

FORMAT: Eng-lega-master-tb-prod-C
REVISION: E
DATE: 2020/01/14