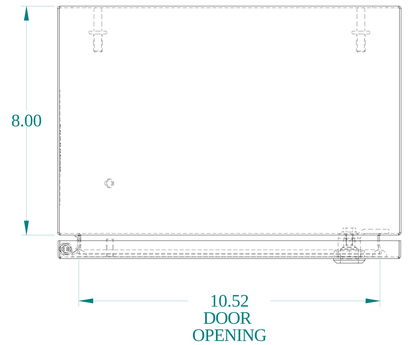

TOP VIEW

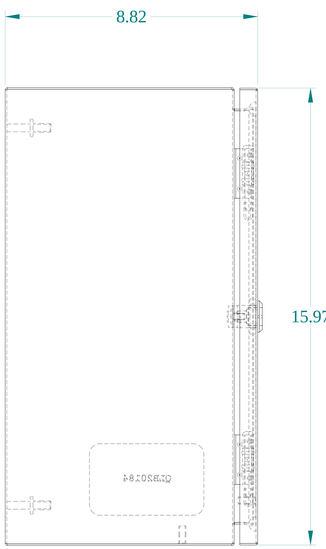

SIDE VIEW

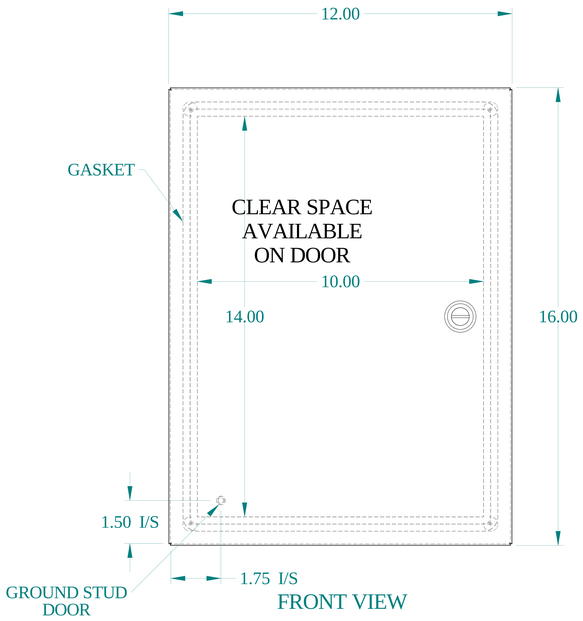

FRONT VIEW

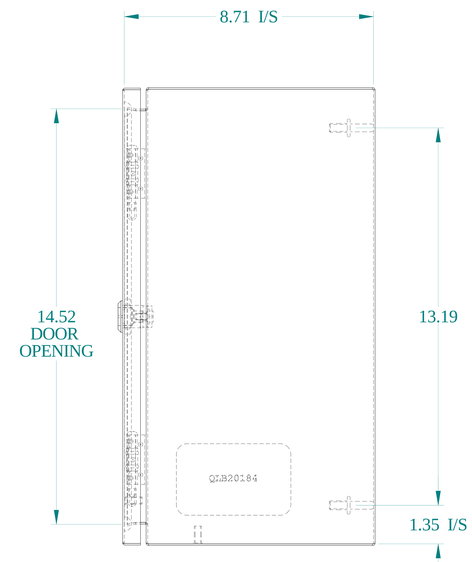

SIDE VIEW

BACK VIEW

ISOMETRIC VIEWS

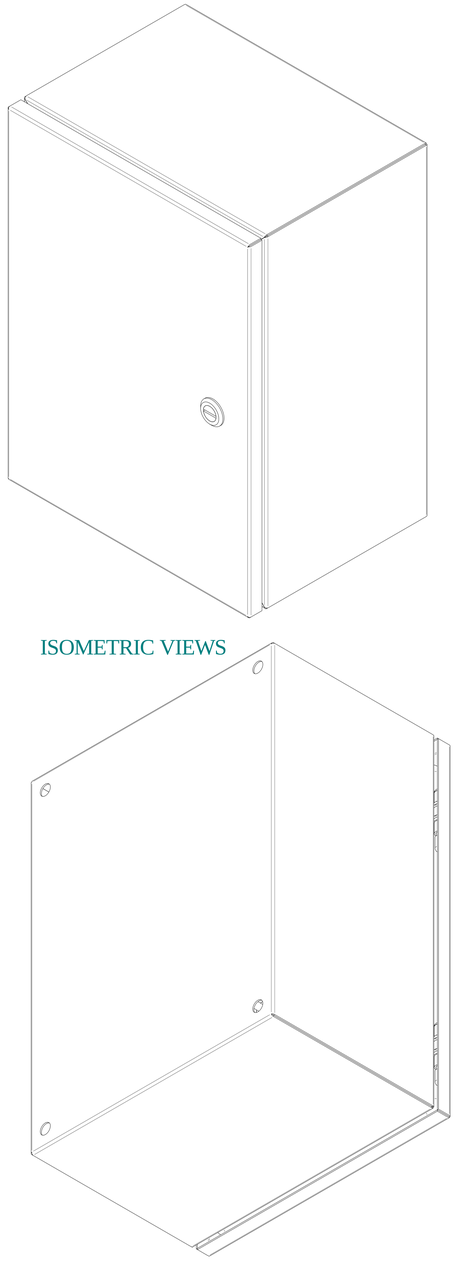

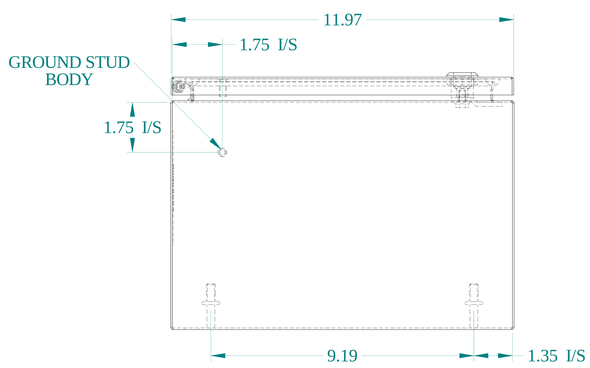

BOTTOM VIEW

HAMMOND MANUFACTURING®

www.hammondmfg.com

Data subject to change without notice.

Part # : EN4SD16128SS	Date : Mar. 21, 2023

Link:www.hammfg.com/EN4SD16128SS