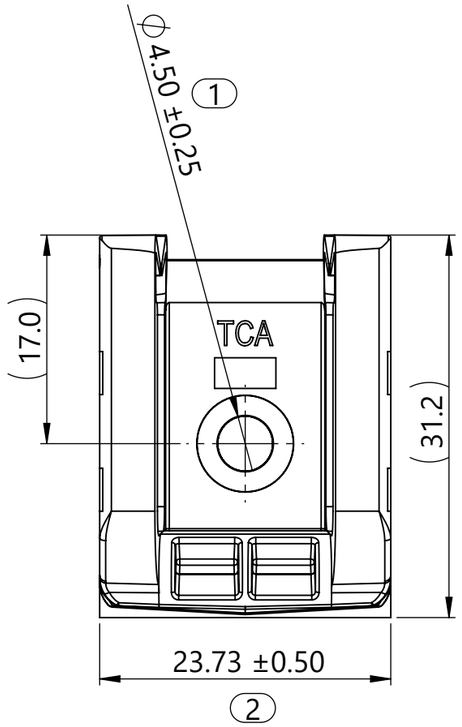

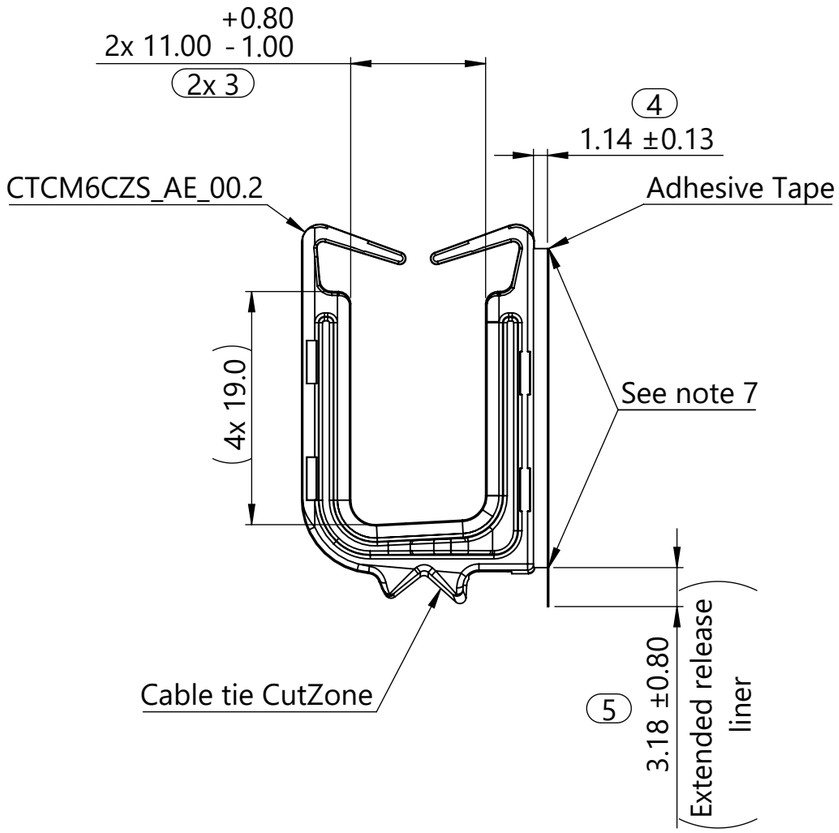

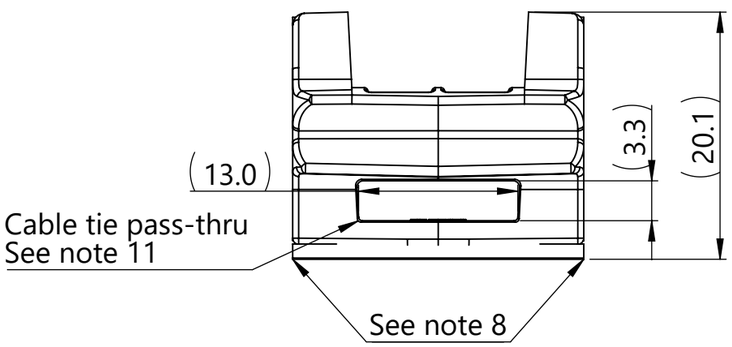

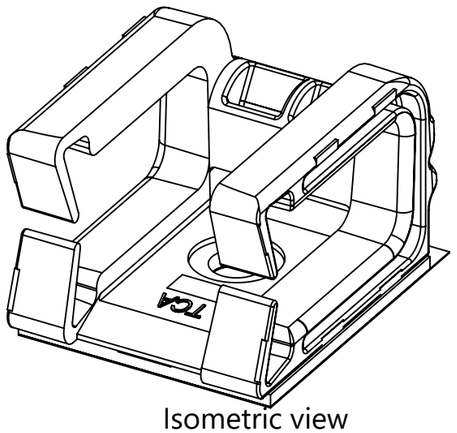

Isometric view

Notes:
1. Material: See chart
2. Material color: See chart
3. Maximum percent regrind permissible: 0%
6 4. Maximum allowable flash to be: 0.25 mm
7 5. Maximum allowable mismatch to be: 0.10 mm
6. A dimension without an inspection report symbol ( ) does not require inspection. It may be controlled on the individual component drawing.
   a. Total number of inspections required: 7
   b. Last number used: 7
   c. Missing symbols: -
7. Tape may be flush or inside the mount edge
8. Tape may be flush or extend beyond the edge of the mount
9. Store product in its original packaging between 4°C to 38°C (40°F to 100°F) and 0-95% relative humidity, the optimum storage conditions are 22°C (72°F) and 50% relative humidity out of direct sunlight
10. Mounting screw size:
    - M4
    - #8 [0.164 in]
11. Accommodates cable tie series: T18 - T120
12. Accommodates 3/8in grip tie: GT.375

Part Description	CTCM11CZS_AE			Adhesive Tape		
	Drawing Number	Material	Color	Storage Conditions	Adhesive Material	Color
CTCM11CZA_AE-PA66HS-BK	24-1130-002-CSU_00.2	PA66HS	Black (BK)	See note 9	241-002-08 acrylic foam tape	Black (BK)
CTCM11CZA_AE-PA66HS-WH	24-1130-002-CSU_00.2	PA66HS	White (WH)	See note 9	241-002-08 acrylic foam tape	Black (BK)

Revision level			Revision Record
Drawing	State	Part	ECN 312175
00.2	Design Release	-	
Changed	Date (YYYY/MM/DD)		
Spangler	2025/05/06		
Approved	Date (YYYY/MM/DD)		
Mann	2025/08/19		

All drawing revision are stored in CAD PDM database

The copyright of this drawing is reserved by HellermannTyton.

Drawn	Spangler	Date (YYYY/MM/DD) 2025/05/06
Approved	Mann	Date (YYYY/MM/DD) 2025/05/06

Units: mm

HellermannTyton
www.HellermannTyton.com

Title: CTCM11CZA_AE 11 mm cradle with adhesive mount, retention arms, and CutZone

Drawing-No: 25-0578-102-CSU

Scale: 2:1
Global Project Number: 25-0578
Format: A3
Sheet: 1/1