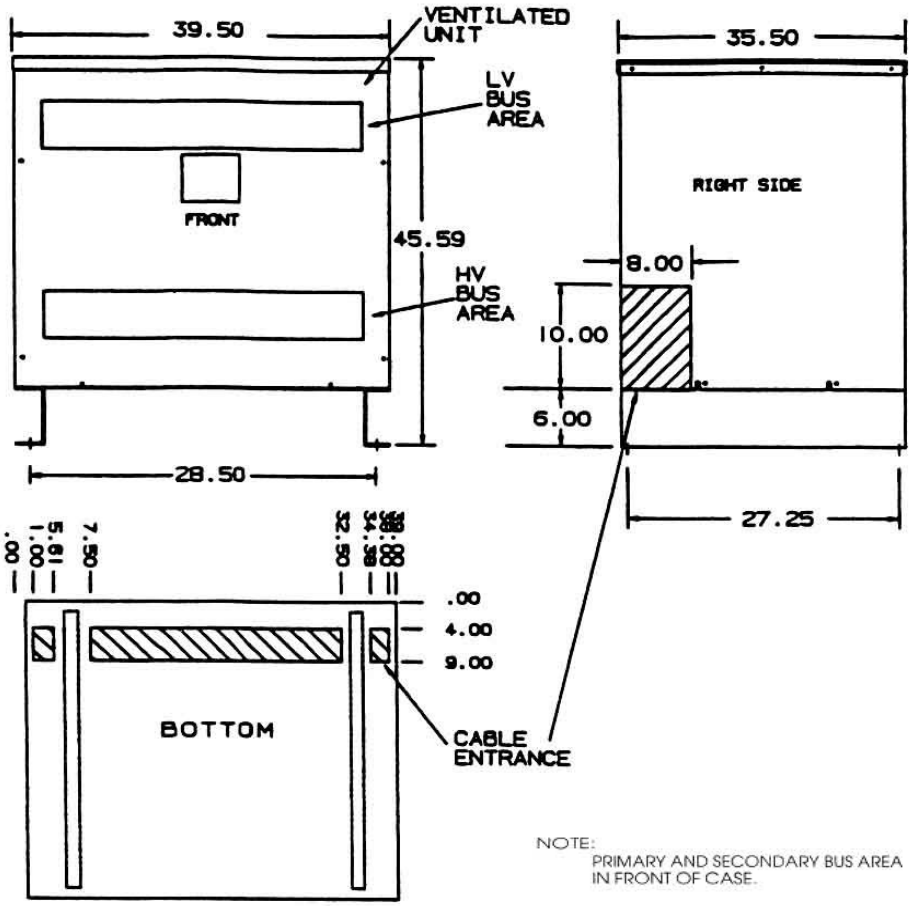

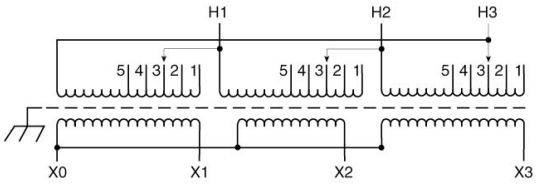

Primary Volts	%	Connect Leads to Tap No.
483	105	1
472	102.5	2
460	100	3
449	97.5	4
437	95	5
Secondary Volts		
460		X1, X2, X3
266 1 phase		X1 & X0 X2 & X0 X3 & X0

NOTE:
PRIMARY AND SECONDARY BUS AREA IN FRONT OF CASE.

KEY: DENOTES CONDUIT AREAS

KVA	CATALOG NUMBER	VOLTAGE		WEATHER SHIELD	WEIGHT	PHASE	FREQ.
		HIGH	LOW				
330	**DTGB-0330-4S**	460Δ	460Y/266	WS-A-5	1500 Lbs	3ϕ	60 Hz

TYPICAL PERFORMANCE DATA

Winding Rise	150°C
Insulation	220°C
Sound Level	60 dB

Regulation @ 100% PF	2.08%
Standards:	UL/CSA

Impedance	5.71%

Typical Efficiency	97.81%
No Load Losses	968 W
Full Load Losses	7,391 W

Revisions

ACME ELECTRIC

Type No.

					A	PRINTS TO	CONTROL 7	A