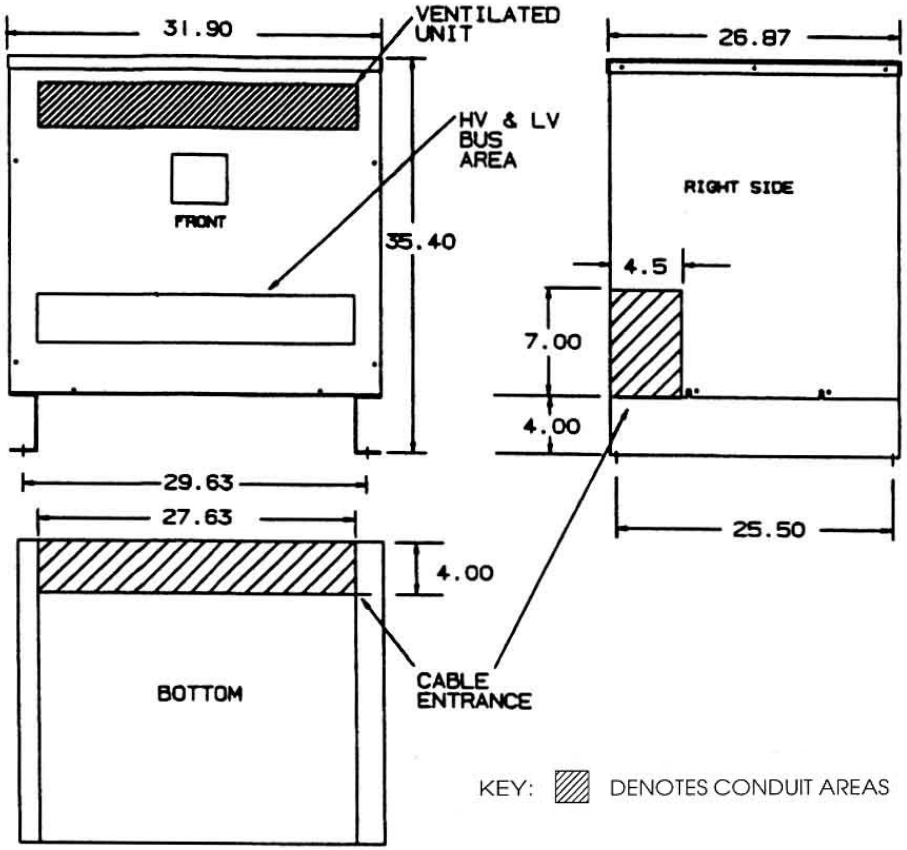

NOTE:
PRIMARY AND SECONDARY BUS AREA IN FRONT OF CASE.

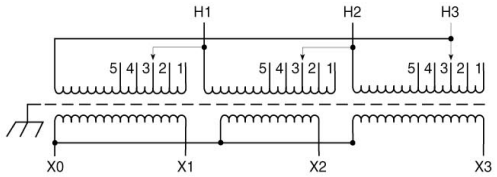

Primary Volts	%	Connect Leads to Tap No.
604	105	1
589	102.5	2
575	100	3
561	97.5	4
546	95	5
Secondary Volts		
460		X1, X2, X3
266 1 phase		X1 & X0 X2 & X0 X3 & X0

KVA	CATALOG NUMBER	VOLTAGE		WEATHER SHIELD	WEIGHT	PHASE	FREQ.
		HIGH	LOW				
93	**DTHB-093-4S**	575Δ	460Y/266	WS-A-3	685 Lbs	3ϕ	60 Hz

TYPICAL PERFORMANCE DATA

Winding Rise	150°C
Insulation	220°C
Sound Level	50 dB

Impedance:	4.28%
Standards:	UL/CSA

Windings:	AL

Typical Efficiency	
No Load Losses	
Full Load Losses	

Revisions

ACME ELECTRIC

Type No.

					A	PRINTS TO	CONTROL 7	A