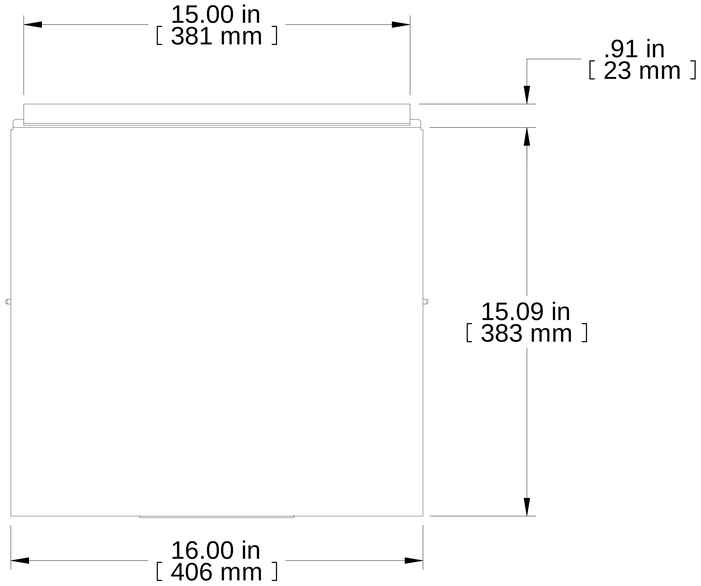

TOP VIEW

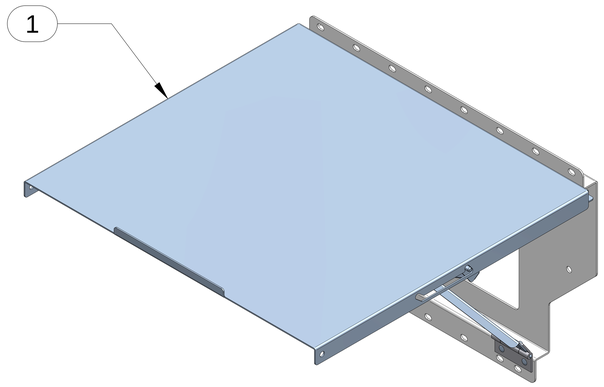

ISOMETRIC

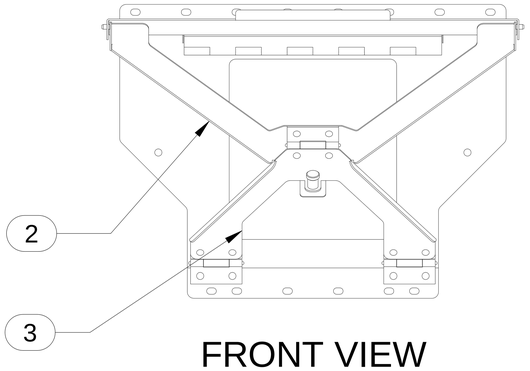

FRONT VIEW

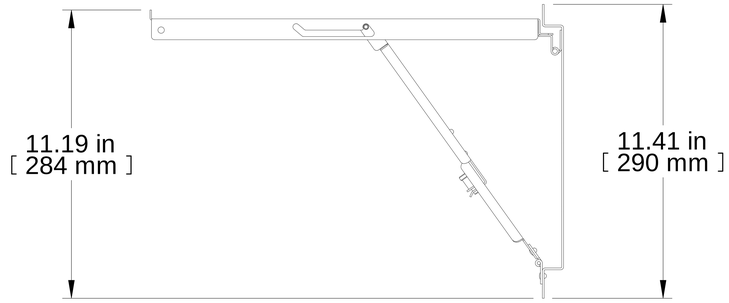

R.S. VIEW

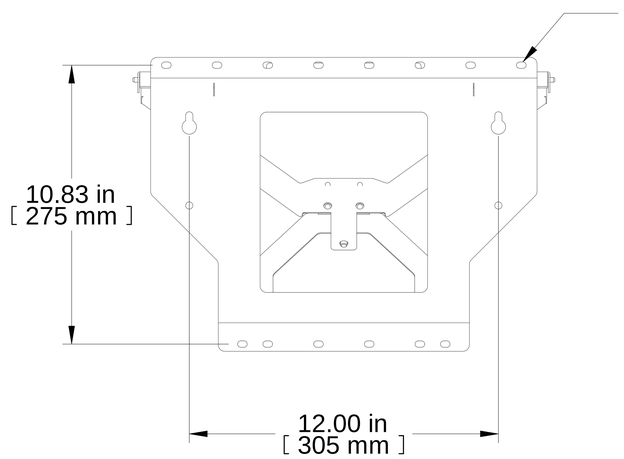

REAR VIEW

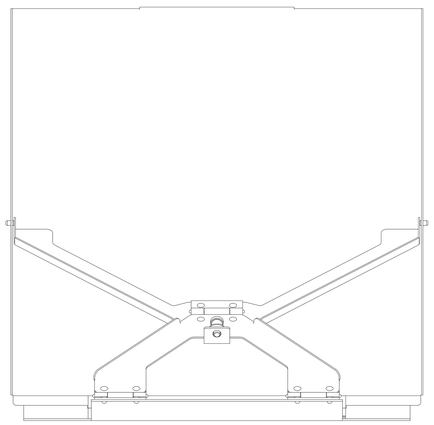

BOTTOM VIEW

Item Number	Title	Quantity
1	HME - DOOR SHELF WELDMENT	1
2	TOP BRACE	1
3	BOTTOM BRACE	1

PART NUMBERS

DMS1615	PAINTED GRAY TEXTURED RAL7035

NOTES

Opens to 90 or 75 Degree Angle
Quickly Folds Down for Compact Storage
See Hammond Website for More Information

Français

Pour tous les détails sur nos produits,
svp veuillez consulter notre site www.hammondmfg.com

Data subject to change without notice. Isometric drawing not to scale.
Les données sont sujettes à changement sans préavis.

HAMMOND MANUFACTURING®

www.hammondmfg.com

PART NO. **DMS1615**