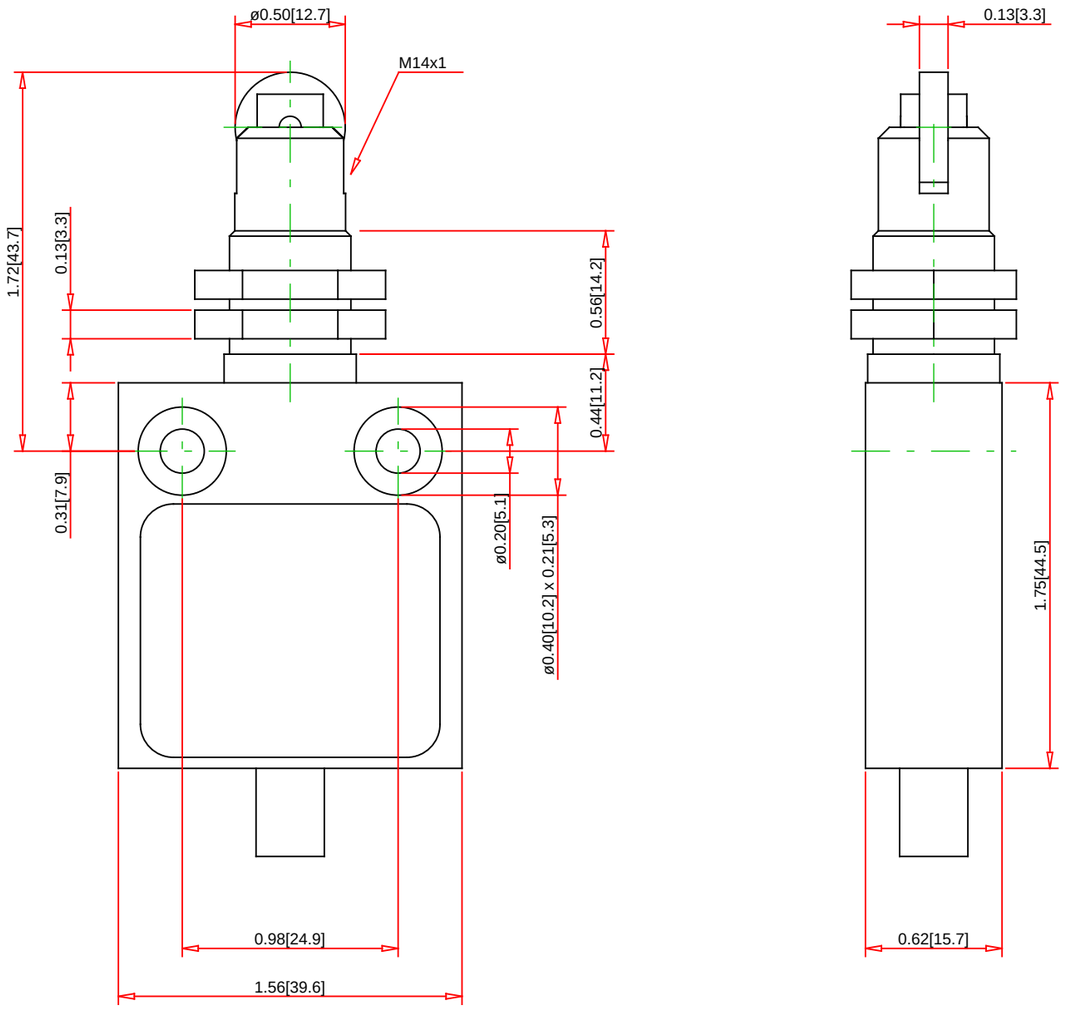

Note:
- Drawings Not To Scale
- Drawings Subject to Change Without Notice
- Dimensions are inches next to [Millimeters]

Part No.:

9007MS07S0300

Telemecanique Sensors

Telemecanique Sensors
1875 Founders Drive
Dayton, OH 45420-4017
Customer Care Center : 1-800-435-2121
Web : www.tesensors.com

Technical Information:

Terminal Type:	
Enclosure Rating:	NEMA 1/2/4/6/6P/12/13; IP67
Approvals:	UL # E42259 CCN NKCR - CSA # LR25490 Class 3211-03 - CE
Weight:	1.1 lb
Conforming to Standards:	NEMA and UL type 6P
RoHS:	No
Operating Temperature Range:	-20 to +220° F (-28.9 to +104° C)
Shock Resistance:	35G
Vibration Resistance:	10G (75 to 1200Hz)
Max. Actuation Speed :	
Repeat Accuracy:	
Operating Torque/Force:	80 Ounces
Cable Length:	9 ft

Specification:

Description:	9007M, silver contacts, bushing mount, parallel roller plunger, 9' bottom cable
Body Style/Type Description:	NEMA Square D Limit Switches 9007MS/ML Miniature Potted 39 mm Metal Body
Head Type:	Metal, bushing mounted, parallel roller plunger
Lever Arms:	Lever Arm (ordered separately)
Body with Contact Type:	1 N.O. / 1 N.C. SPDT Snap Action Form C - Silver
Conduit Thread:	9 ft
Ampere Rating Continuous:	10A/5A
Maximum Voltage Rating:	240VAC/28VDC
Actuation:	Horizontal - Parallel
Actuator Action:	Momentary
Lever Arm Length:	
Roller Dimension:	0.5 in (13mm)
Roller Material:	Stainless Steel
Contact Configuration:	1 N.O./1 N.C.
Contact Operation:	Snap Action
Connection Type:	#18 AWG SJTO Cable - Yellow
Head Material:	Stainless steel/brass
Positive Opening:	No