Product data sheet

Specifications

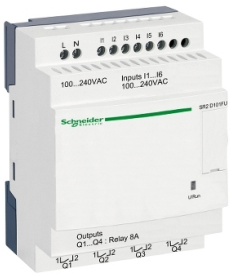

compact smart relay, Zelio Logic SR2 SR3, 10 IO, 100 to 240V AC, no clock, no display

SR2D101FU

Product availability: Stock - Normally stocked in distribution facility

Main

Range of Product	Zelio Logic
Product or Component Type	Compact smart relay

Complementary

Local display	Without
Number or control scheme lines	240 ladder
Cycle time	6…90 ms
Backup time	10 years 77 °F (25 °C)
Clock drift	12 min/year 32…131 °F (0…55 °C) 6 s/month 77 °F (25 °C)
Checks	Program memory on each power up
[Us] rated supply voltage	100...240 V AC
Supply voltage limits	85…264 V
Supply frequency	50/60 Hz
Maximum supply current	30 mA 240 V without extension) 80 mA 100 V without extension)
Power consumption in VA	7 VA without extension
Isolation voltage	1780 V
Protection Type	Against inversion of terminals (control instructions not executed)
Discrete input number	6
Discrete input voltage	100...240 V AC
Discrete input current	0.6 mA
Discrete input frequency	47...53 Hz 57...63 Hz
Voltage state 1 guaranteed	>= 79 V discrete input
Voltage state 0 guaranteed	<= 40 V discrete input
Current state 1 guaranteed	>= 0.17 mA discrete input)
Current state 0 guaranteed	<= 0.5 mA discrete input)
Analogue input number	0
Input impedance	350 kOhm discrete input
Number of Outputs	4 relay
Output voltage limits	5...30 V DC relay output) 24...250 V AC

Price is “List Price” and may be subject to a trade discount – check with your local distributor or retailer for actual price.

Disclaimer: This documentation is not intended as a substitute for and is not to be used for determining suitability or reliability of these products for specific user applications

Contacts type and composition	NO relay output
Output thermal current	8 A for all 4 outputs relay output
Electrical durability	AC-12 500000 cycles 230 V, 1.5 A relay output IEC 60947-5-1 AC-15 500000 cycles 230 V, 0.9 A relay output IEC 60947-5-1 DC-12 500000 cycles 24 V, 1.5 A relay output IEC 60947-5-1 DC-13 500000 cycles 24 V, 0.6 A relay output IEC 60947-5-1
Switching capacity in mA	>= 10 mA 12 V relay output)
Operating rate in Hz	0.1 Hz at Ie)relay output 10 Hz no load)relay output
Mechanical durability	10000000 cycles relay output
[Uimp] rated impulse withstand voltage	4 kV EN/IEC 60947-1 and EN/IEC 60664-1
Clock	Without
Response time	50 ms ladder from state 0 to state 1)discrete input 50 ms ladder from state 1 to state 0)discrete input 50...255 ms FBD from state 0 to state 1)discrete input 50...255 ms FBD from state 1 to state 0)discrete input 10 ms from state 0 to state 1)relay output 5 ms from state 1 to state 0)relay output
Connections - terminals	Screw terminals, 1 x 0.2...1 x 2.5 mm² 25 AWG...14 AWG) semi-solid Screw terminals, 1 x 0.2...1 x 2.5 mm² 25 AWG...14 AWG) solid Screw terminals, 1 x 0.25...1 x 2.5 mm² 24 AWG...14 AWG) flexible with cable end Screw terminals, 2 x 0.2...2 x 1.5 mm² 24 AWG...16 AWG) solid Screw terminals, 2 x 0.25...2 x 0.75 mm² 24 AWG...18 AWG) flexible with cable end
Tightening torque	4.4 lbf.in (0.5 N.m)
Overvoltage category	III conforming to IEC 60664-1
Net Weight	0.49 lb(US) (0.22 kg)

Environment

Immunity to microbreaks	10 ms
Product Certifications	GOST C-tick UL GL CSA
Standards	IEC 60068-2-27 Ea IEC 60068-2-6 Fc IEC 61000-4-12 IEC 61000-4-4 level 3 IEC 61000-4-5 IEC 61000-4-2 level 3 IEC 61000-4-11 IEC 61000-4-3 IEC 61000-4-6 level 3
IP degree of protection	IP20 IEC 60529 terminal block) IP40 IEC 60529 front panel)
Environmental characteristic	EMC directive conforming to IEC 61000-6-2 EMC directive conforming to IEC 61000-6-3 EMC directive conforming to IEC 61000-6-4 EMC directive conforming to IEC 61131-2 zone B Low voltage directive conforming to IEC 61131-2
Disturbance radiated/conducted	Class B EN 55022-11 group 1
Pollution degree	2 IEC 61131-2
Ambient air temperature for operation	-4…104 °F (-20…40 °C) in non-ventilated enclosure IEC 60068-2-1 and IEC 60068-2-2 -4…131 °F (-20…55 °C) IEC 60068-2-1 and IEC 60068-2-2
Ambient Air Temperature for Storage	-40…158 °F (-40…70 °C)

Operating altitude	6561.68 ft (2000 m)
Maximum altitude transport	10000 ft (3048 m)
Relative Humidity	95 % without condensation or dripping water

Ordering and shipping details

Category	US1000I22378
Discount Schedule	000I
GTIN	3389110549775
Returnability	Yes
Country of origin	FR

Packing Units

Unit Type of Package 1	PCE
Nbr. of units in pkg.	1
Package 1 Height	2.559 in (6.500 cm)
Package 1 Width	3.583 in (9.100 cm)
Package 1 Length	3.937 in (10.000 cm)
Package weight(Lbs)	7.160 oz (203.000 g)
Unit Type of Package 2	S03
Number of Units in Package 2	30
Package 2 Height	11.811 in (30.000 cm)
Package 2 Width	11.811 in (30.000 cm)
Package 2 Length	15.748 in (40.000 cm)
Package 2 Weight	14.656 lb(US) (6.648 kg)

Contractual warranty

Warranty (in months)	18

Environmental Data

Schneider Electric aims to achieve Net Zero status by 2050 through supply chain partnerships, lower impact materials, and circularity via our ongoing “Use Better, Use Longer, Use Again” campaign to extend product lifetimes and recyclability.

Environmental Data explained >

How we assess product sustainability >

Environmental footprint

Total lifecycle Carbon footprint	**269 kg CO2 eq.**
Carbon footprint of the manufacturing phase [A1 to A3]	**2 kg CO2 eq.**
Carbon footprint of the distribution phase [A4]	**0.1 kg CO2 eq.**
Carbon footprint of the installation phase [A5]	**0 kg CO2 eq.**
Carbon footprint of the use phase [B2, B3, B4, B6]	**266 kg CO2 eq.**
Carbon footprint of the end-of-life phase [C1 to C4]	**0.4 kg CO2 eq.**
Environmental Disclosure	**Product Environmental Profile**

Use Better

Materials and Substances

Packaging made with recycled cardboard	**Yes**
Packaging without single use plastic	**Yes**
SCIP Number	**91701a78-5972-4eb5-b11f-2737d556b9de**
EU RoHS Directive	**Compliant By Exemption**
REACh Regulation	**Reference contains Substances of Very High Concern above the threshold**
California proposition 65	**WARNING: This product can expose you to chemicals including: Lead and lead compounds, which is known to the State of California to cause cancer and birth defects or other reproductive harm. For more information go to www.P65Warnings.ca.gov**
PVC free	**Yes**

Use Again

Repack and remanufacture

Recyclability potential, in %	**10**
Circularity Profile	**End of Life Information**
Take-back	**No**
WEEE Label	**The product must be disposed on European Union markets following specific waste collection and never end up in rubbish bins.**

Dimensions Drawings

Compact and Modular Smart Relays

Mounting on 35 mm/1.38 in. DIN Rail

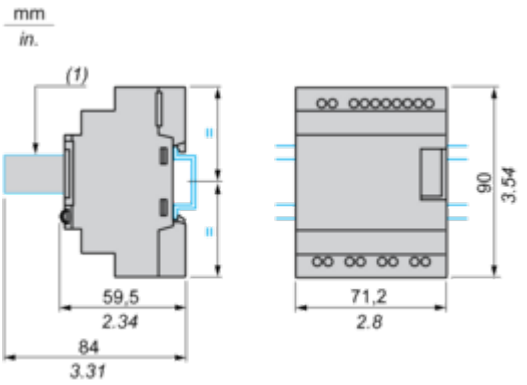

(1) With SR2USB01 or SR2BTC01

Screw Fixing (Retractable Lugs)

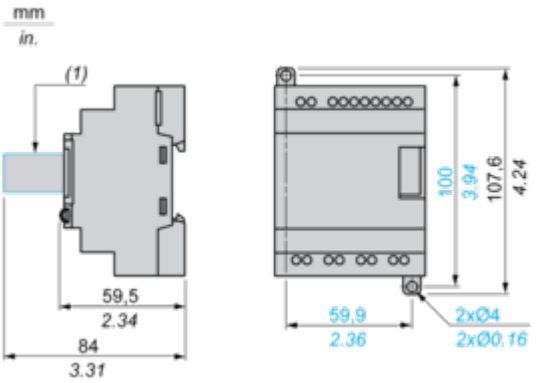

(1) With SR2USB01 or SR2BTC01

Position of Display

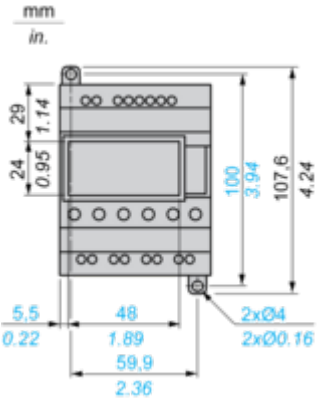

Connections and Schema

Connection of Smart Relays on AC Supply

SR••••1B, SR••••1FU

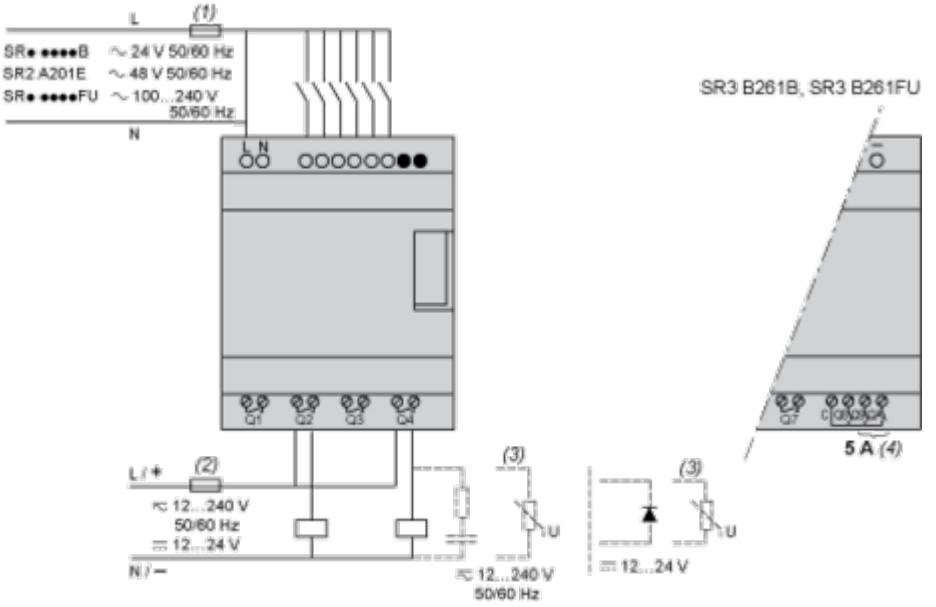

(1) 1 A quick-blow fuse or circuit-breaker.
(2) Fuse or circuit-breaker.
(3) Inductive load.
(4) Q9 and QA: 5 A (max. current in terminal C: 10 A).

With Discrete I/O Extension Module

SR3B•••B + SR3XT•••B, SR3B•••FU + SR3XT•••FU

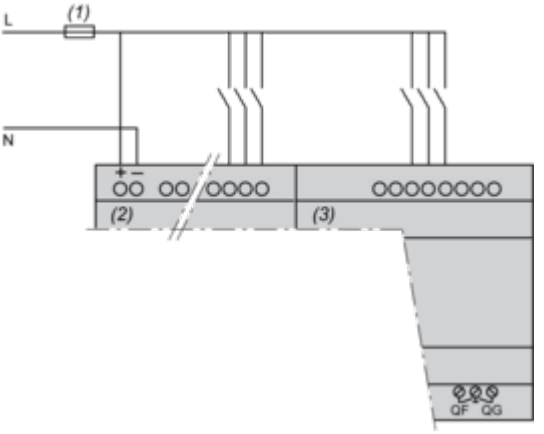

(1) 1 A quick-blow fuse or circuit-breaker.

NOTE: QF and QG: 5 A for SR3XT141••

Performance Curves

Compact and Modular Smart Relays

Electrical Durability of Relay Outputs

(in millions of operating cycles, conforming to IEC/EN 60947-5-1)
AC-12 (1)

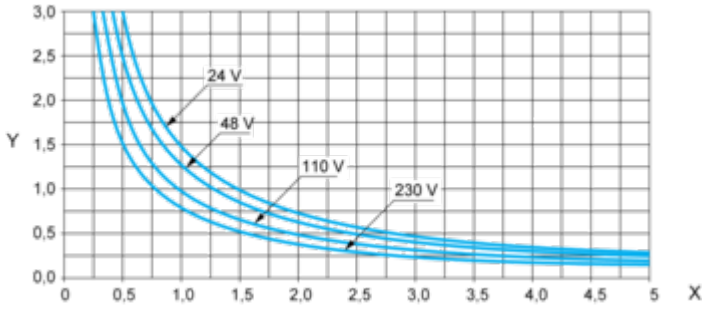

X: Current (A)
Y: Millions of operating cycles
(1) AC-12: switching resistive loads and opto-coupler isolated solid-state loads, cos ≥ 0.9.
AC-14 (1)

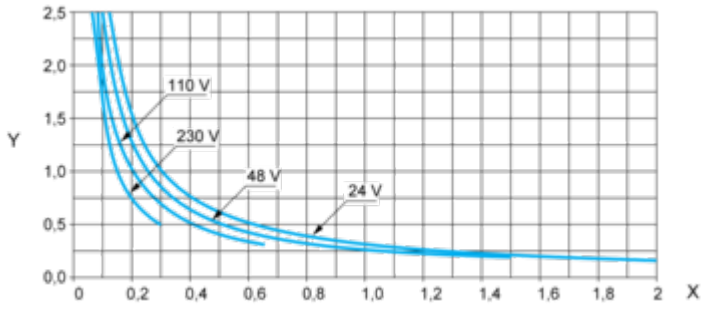

X: Current (A)
Y: Millions of operating cycles
(1) AC-14: switching small electromagnetic loads ≤ 72 VA, make: cos = 0.3, break: cos = 0.3.
AC-15 (1)

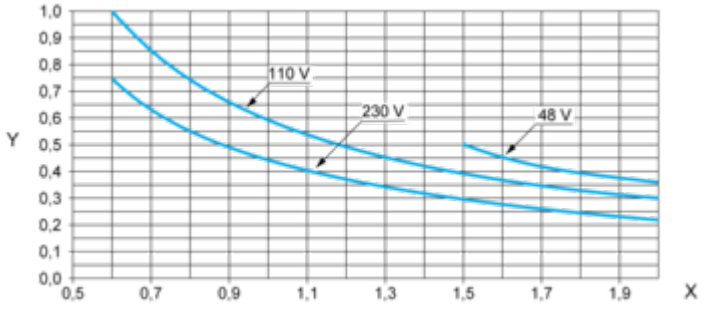

X: Current (A)
Y: Millions of operating cycles
(1) AC-15: switching electromagnetic loads ≥ 72 VA, make: cos = 0.7, break: cos = 0.4.

Image of product / Alternate images

Alternative






L N
I1 I2 I3 I4 I5 I6
100...240VAC
Inputs I1...I6
100...240VAC
Schneider Electric
SR2 D101FU
Outputs
Q1...Q4 Relay 8A

