Product data sheet

Specifications

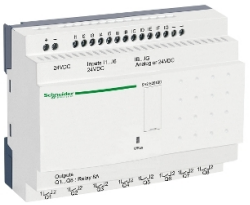

compact smart relay, Zelio Logic SR2 SR3, 20 IO, 24V DC, clock, no display

SR2E201BD

Product availability: Stock - Normally stocked in distribution facility

Main

Range of Product	Zelio Logic
Product or Component Type	Compact smart relay

Complementary

Local display	Without
Number or control scheme lines	0…240 ladder 0…500 FBD
Cycle time	6…90 ms
Backup time	10 years 77 °F (25 °C)
Clock drift	12 min/year 32…131 °F (0…55 °C) 6 s/month 77 °F (25 °C)
Checks	Program memory on each power up
[Us] rated supply voltage	24 V DC
Supply voltage limits	19.2…30 V
Maximum supply current	100 mA without extension)
Power dissipation in W	6 W without extension
Reverse polarity protection	With
Discrete input number	12 IEC 61131-2 Type 1
Discrete input type	Resistive
Discrete input voltage	24 V DC
Discrete input current	4 mA
Counting frequency	1 kHz discrete input
Voltage state 1 guaranteed	>= 15 V I1...IA and IH...IR discrete input circuit >= 15 V IB...IG used as discrete input circuit
Voltage state 0 guaranteed	<= 5 V I1...IA and IH...IR discrete input circuit <= 5 V IB...IG used as discrete input circuit
Current state 1 guaranteed	>= 1.2 mA IB...IG used as discrete input circuit) >= 2.2 mA I1...IA and IH...IR discrete input circuit)
Current state 0 guaranteed	<= 0.5 mA IB...IG used as discrete input circuit) <= 0.75 mA I1...IA and IH...IR discrete input circuit)
Input compatibility	3-wire proximity sensors PNP discrete input
Analogue input number	6
Analogue Input Type	Common mode
Analogue input range	0...10 V 0...24 V

Price is “List Price” and may be subject to a trade discount – check with your local distributor or retailer for actual price.

Disclaimer: This documentation is not intended as a substitute for and is not to be used for determining suitability or reliability of these products for specific user applications

Temperature probe type	NTC 10k 77 °F (25 °C) NTC 1000k 77 °F (25 °C) KTY81 210/220/221/222/250 Pt 500
Maximum permissible voltage	30 V analogue input circuit
Analogue input resolution	8 bits
LSB value	39 mV analogue input circuit
Conversion time	Smart relay cycle time analogue input circuit
Conversion error	+/- 5 % 77 °F (25 °C) analogue input circuit +/- 6.2 % 131 °F (55 °C) analogue input circuit
Repeat accuracy	+/- 2 % 131 °F (55 °C) analogue input circuit
Operating distance	10 m between stations, with screened cable (sensor not isolated) analogue input circuit
Input impedance	12 kOhm IB...IG used as analogue input circuit 12 kOhm IB...IG used as discrete input circuit 7.4 kOhm I1...IA and IH...IR discrete input circuit
Number of Outputs	8 relay
Output voltage limits	24...250 V AC relay output) 5...30 V DC relay output)
Contacts type and composition	NO relay output
Output thermal current	8 A for all 8 outputs relay output
Electrical durability	AC-12 500000 cycles 230 V, 1.5 A relay output IEC 60947-5-1 AC-15 500000 cycles 230 V, 0.9 A relay output IEC 60947-5-1 DC-12 500000 cycles 24 V, 1.5 A relay output IEC 60947-5-1 DC-13 500000 cycles 24 V, 0.6 A relay output IEC 60947-5-1
Switching capacity in mA	>= 10 mA 12 V relay output)
Operating rate in Hz	0.1 Hz at Ie)relay output 10 Hz no load)relay output
Mechanical durability	10000000 cycles relay output
[Uimp] rated impulse withstand voltage	4 kV EN/IEC 60947-1 and EN/IEC 60664-1
Clock	With
Response time	10 ms from state 0 to state 1)relay output 5 ms from state 1 to state 0)relay output
Connections - terminals	Screw terminals, 1 x 0.2...1 x 2.5 mm² 25 AWG...14 AWG) semi-solid Screw terminals, 1 x 0.2...1 x 2.5 mm² 25 AWG...14 AWG) solid Screw terminals, 1 x 0.25...1 x 2.5 mm² 24 AWG...14 AWG) flexible with cable end Screw terminals, 2 x 0.2...2 x 1.5 mm² 24 AWG...16 AWG) solid Screw terminals, 2 x 0.25...2 x 0.75 mm² 24 AWG...18 AWG) flexible with cable end
Tightening torque	4.4 lbf.in (0.5 N.m)
Overvoltage category	III conforming to IEC 60664-1
Net Weight	0.77 lb(US) (0.35 kg)

Environment

Immunity to microbreaks	1 ms
Product Certifications	C-tick UL GL CSA GOST

Standards	IEC 61000-4-4 level 3 IEC 61000-4-6 level 3 IEC 61000-4-3 IEC 61000-4-12 IEC 61000-4-5 IEC 61000-4-11 IEC 61000-4-2 level 3 IEC 60068-2-27 Ea IEC 60068-2-6 Fc
IP degree of protection	IP20 IEC 60529 terminal block) IP40 IEC 60529 front panel)
Environmental characteristic	EMC directive conforming to IEC 61000-6-2 EMC directive conforming to IEC 61000-6-3 EMC directive conforming to IEC 61000-6-4 EMC directive conforming to IEC 61131-2 zone B Low voltage directive conforming to IEC 61131-2
Disturbance radiated/conducted	Class B EN 55022-11 group 1
Pollution degree	2 IEC 61131-2
Ambient air temperature for operation	-4…104 °F (-20…40 °C) in non-ventilated enclosure IEC 60068-2-1 and IEC 60068-2-2 -4…131 °F (-20…55 °C) IEC 60068-2-1 and IEC 60068-2-2
Ambient Air Temperature for Storage	-40…158 °F (-40…70 °C)
Operating altitude	6561.68 ft (2000 m)
Maximum altitude transport	10000 ft (3048 m)
Relative Humidity	95 % without condensation or dripping water

Ordering and shipping details

Category	US1000I22378
Discount Schedule	000I
GTIN	3389110549812
Returnability	No
Country of origin	FR

Packing Units

Unit Type of Package 1	PCE
Nbr. of units in pkg.	1
Package 1 Height	2.638 in (6.700 cm)
Package 1 Width	4.016 in (10.200 cm)
Package 1 Length	5.236 in (13.300 cm)
Package weight(Lbs)	11.534 oz (327.000 g)
Unit Type of Package 2	S03
Number of Units in Package 2	20
Package 2 Height	11.811 in (30.000 cm)
Package 2 Width	11.811 in (30.000 cm)
Package 2 Length	15.748 in (40.000 cm)
Package 2 Weight	15.529 lb(US) (7.044 kg)

Contractual warranty

Warranty (in months)	18

Environmental Data

Schneider Electric aims to achieve Net Zero status by 2050 through supply chain partnerships, lower impact materials, and circularity via our ongoing “Use Better, Use Longer, Use Again” campaign to extend product lifetimes and recyclability.

Environmental Data explained >

How we assess product sustainability >

Environmental footprint

Total lifecycle Carbon footprint	**607 kg CO2 eq.**
Carbon footprint of the manufacturing phase [A1 to A3]	**397 kg CO2 eq.**
Carbon footprint of the distribution phase [A4]	**6 kg CO2 eq.**
Carbon footprint of the installation phase [A5]	**0.6 kg CO2 eq.**
Carbon footprint of the use phase [B2, B3, B4, B6]	**195 kg CO2 eq.**
Carbon footprint of the end-of-life phase [C1 to C4]	**8 kg CO2 eq.**
Environmental Disclosure	**Product Environmental Profile**

Use Better

Materials and Substances

Packaging made with recycled cardboard	**Yes**
Packaging without single use plastic	**Yes**
SCIP Number	**Eee2fc35-1620-4b70-b1d5-206e9240044e**
EU RoHS Directive	**Compliant By Exemption**
REACh Regulation	**Reference contains Substances of Very High Concern above the threshold**
California proposition 65	**WARNING: This product can expose you to chemicals including: Lead and lead compounds, which is known to the State of California to cause cancer and birth defects or other reproductive harm. For more information go to www.P65Warnings.ca.gov**
PVC free	**Yes**

Use Again

Repack and remanufacture

Recyclability potential, in %	**0**
Circularity Profile	**End of Life Information**
Take-back	**No**
WEEE Label	**The product must be disposed on European Union markets following specific waste collection and never end up in rubbish bins.**

Dimensions Drawings

Compact and Modular Smart Relays

Mounting on 35 mm/1.38 in. DIN Rail

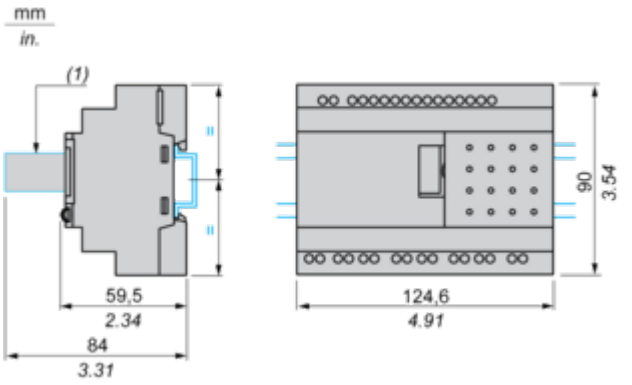

(1) With SR2USB01 or SR2BTC01

Screw Fixing (Retractable Lugs)

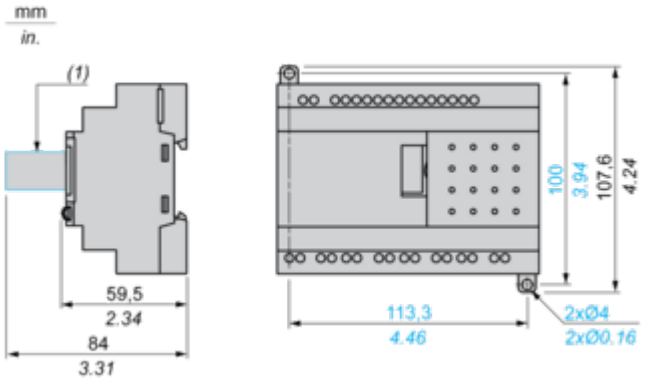

(1) With SR2USB01 or SR2BTC01

Position of Display

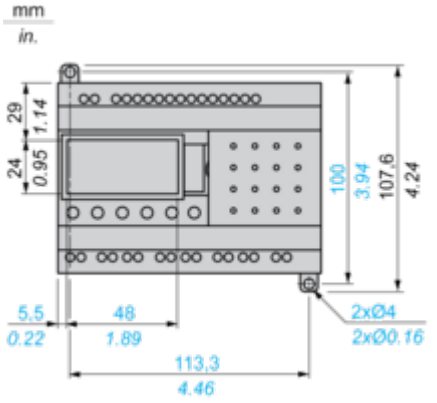

Connections and Schema

Compact and Modular Smart Relays

Connection of Smart Relays on DC Supply

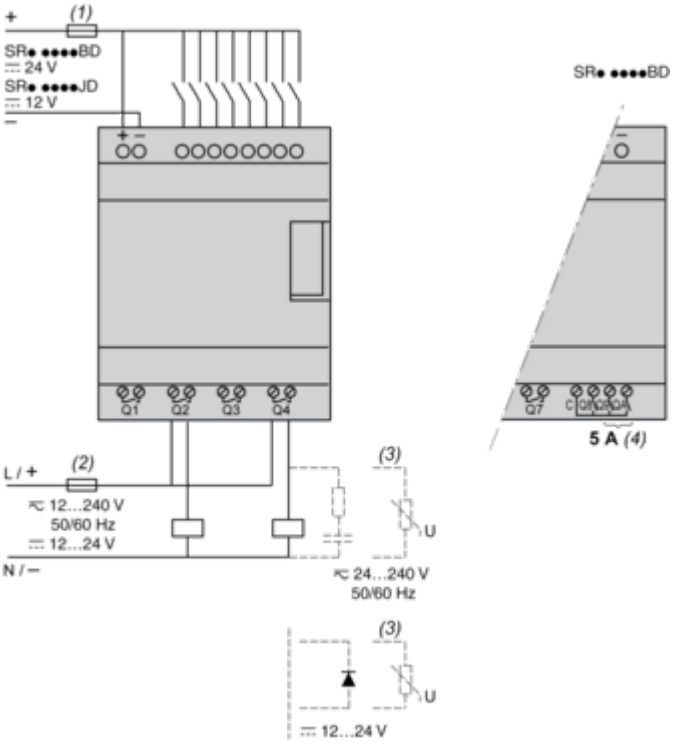

(1) 1 A quick-blow fuse or circuit-breaker.
(2) Fuse or circuit-breaker.
(3) Inductive load.
(4) Q9 and QA: 5 A (max. current in terminal C: 10 A).

Discrete Input Used for 3-Wire Sensors

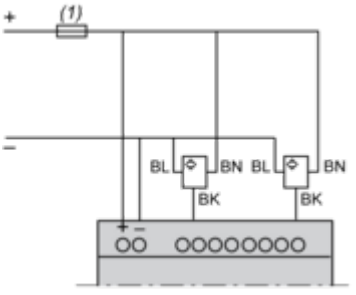

(1) 1 A quick-blow fuse or circuit-breaker.

Connection of Thermistor Input on DC Supply

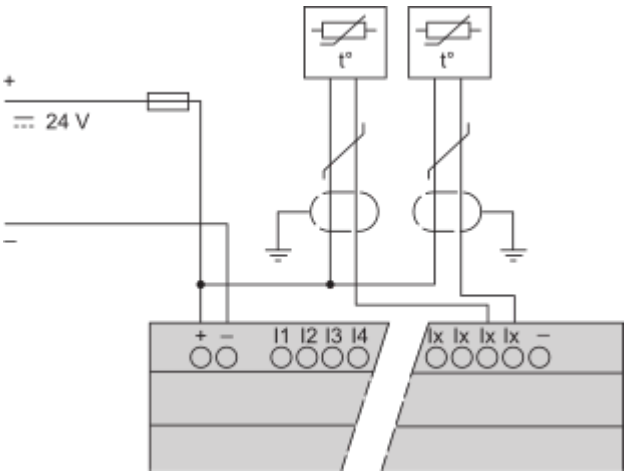

NOTE: Ix = IB...IG

Performance Curves

Compact and Modular Smart Relays

Electrical Durability of Relay Outputs

(in millions of operating cycles, conforming to IEC/EN 60947-5-1)
DC-12 (1)

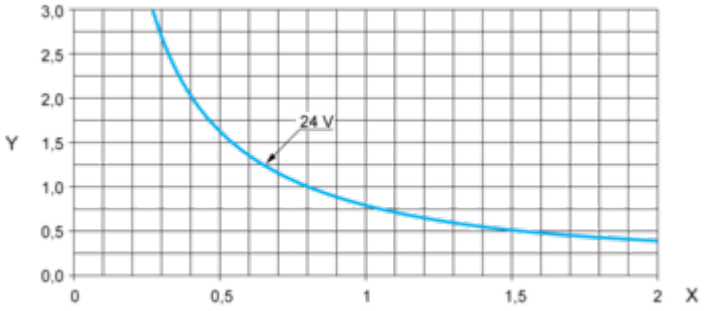

X: Current (A)
Y: Millions of operating cycles
(1) DC-12: control of resistive loads and of solid state loads isolated by opto-coupler, L/R ≤ 1 ms.

DC-13 (1)

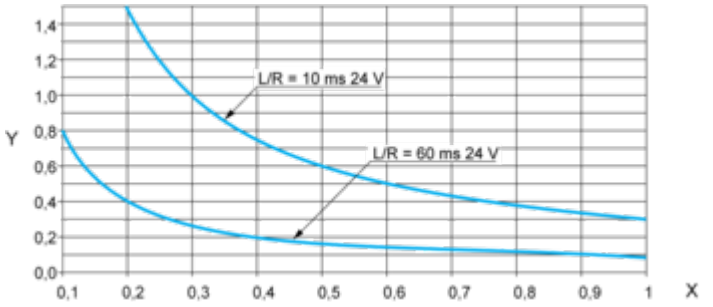

X: Current (A)
Y: Millions of operating cycles
(1) DC-13: switching electromagnets, L/R ≤ 2 x (Ue x Ie) in ms, Ue: rated operational voltage, Ie: rated operational current (with a protection diode on the load, DC-12 curves must be used with a coefficient of 0.9 applied to the number in millions of operating cycles).

Image of product / Alternate images

Alternative





