Product data sheet

Specifications



Push button, Harmony XB5, grey plastic, flush, red, 22mm, spring return, unmarked, 1 NC, compact push in terminals

XB5AA425

Product availability: Stock - Normally stocked in distribution facility

Main

Range of Product	Harmony XB5
Product or Component Type	Push-button
Device short name	XB5
Bezel material	Plastic
Head type	Standard
Fixing collar material	Plastic
Mounting diameter	0.9 in (22.5 mm)
Sale per indivisible quantity	1
Shape of signaling unit head	Round
Type of operator	spring return
Operator profile	Red flush, unmarked
Contacts type and composition	1 NC
Contact operation	Slow-break
Connections - terminals	Push-in, <= 2 x 1.5 mm² with wire end ferrule IEC 60947-1 Push-in, >= 1 x 0.34 mm² without wire end ferrule IEC 60947-1

Complementary

Height	1.7 in (42 mm)
Width	1.2 in (30 mm)
Depth	1.7 in (43.2 mm)
Terminals description ISO n°1	(21-22)NC
Net Weight	0.073 lb(US) (0.033 kg)
Resistance to high pressure washer	1015.3 psi (7000000 Pa) 131 °F (55 °C) 0.1 m
Contacts usage	Standard contacts
Positive opening	With IEC 60947-5-1 appendix K
Operating travel	0.048 in (1.217 mm) NC changing electrical state) 0.2 in (4.3 mm) total travel)
Operating force	2.25 N NC changing electrical state
Mechanical durability	10000000 cycles
Contacts material	Silver alloy (Ag/Ni)
Short-circuit protection	10 A cartridge fuse gG IEC 60947-5-1

Price is “List Price” and may be subject to a trade discount – check with your local distributor or retailer for actual price.

Disclaimer: This documentation is not intended as a substitute for and is not to be used for determining suitability or reliability of these products for specific user applications

[Ith] conventional free air thermal current	10 A IEC 60947-5-1
[Ui] rated insulation voltage	300 V 3)IEC 60947-1
[Uimp] rated impulse withstand voltage	4 kV IEC 60947-1
[Ie] rated operational current	6 A 120 V, AC-15, A300 IEC 60947-5-1 3 A 240 V, AC-15, A300 IEC 60947-5-1 0.55 A 125 V, DC-13, Q300 IEC 60947-5-1 0.27 A 250 V, DC-13, Q300 IEC 60947-5-1
Device presentation	Complete product
Customizable	No
Customizable	1
GCR BRIDGE	XB5AACUST01
Compatibility code	XB5

Environment

Protective treatment	TH
Ambient Air Temperature for Storage	-40…158 °F (-40…70 °C)
Ambient Air Temperature for Operation	-40…158 °F (-40…70 °C)
Overvoltage category	Class II conforming to IEC 60536
IP degree of protection	IP66 IEC 60529 IP67 IP69 IP69K
Enclosure Type	UL type 4X/13
IK degree of protection	IK03 conforming to IEC 50102
Standards	IEC 60947-1 IEC 60947-5-1 IEC 60947-5-4 IEC 60947-5-5 UL 60947-1 UL 60947-5-1 UL 60947-5-5 UL 1059 UL 486E CSA C22.2 No 60947-1 CSA C22.2 No 60947-5-1 CSA C22.2 No 158 CSA C22.2 No 65 IACS E10
Product Certifications	EAC IECEE CB Scheme CCC UL CSA
Vibration resistance	5 gn (f= 10…500 Hz) conforming to IEC 60068-2-6 25 mm peak to peak (f= 2…10 Hz) conforming to IEC 60068-2-6
Shock resistance	25 gn 6 ms) 1000 shocks on each axis IEC 60068-2-27 30 gn 18 ms) half sine wave acceleration IEC 60068-2-27 50 gn 11 ms) half sine wave acceleration IEC 60068-2-27

Ordering and shipping details

Category	US10CS222469
Discount Schedule	0CS2
GTIN	3606486341254

Returnability	Yes
Country of origin	FR

Packing Units

Unit Type of Package 1	PCE
Nbr. of units in pkg.	1
Package 1 Height	2.05 in (5.2 cm)
Package 1 Width	1.3 in (3.3 cm)
Package 1 Length	3.4 in (8.6 cm)
Package weight(Lbs)	1.2 oz (33 g)

Contractual warranty

Warranty (in months)	18

Environmental Data

Schneider Electric aims to achieve Net Zero status by 2050 through supply chain partnerships, lower impact materials, and circularity via our ongoing “Use Better, Use Longer, Use Again” campaign to extend product lifetimes and recyclability.

Environmental Data explained >

How we assess product sustainability >

Environmental footprint

Total lifecycle Carbon footprint	**0.4 kg CO2 eq.**
Carbon footprint of the manufacturing phase [A1 to A3]	**0.3 kg CO2 eq.**
Carbon footprint of the distribution phase [A4]	**0 kg CO2 eq.**
Carbon footprint of the installation phase [A5]	**0 kg CO2 eq.**
Carbon footprint of the use phase [B2, B3, B4, B6]	**0 kg CO2 eq.**
Carbon footprint of the end-of-life phase [C1 to C4]	**0.1 kg CO2 eq.**
Environmental Disclosure	Product Environmental Profile

Use Better

Materials and Substances

Packaging made with recycled cardboard	**No**
Packaging without single use plastic	**No**
EU RoHS Directive	Compliant
REACh Regulation	Reference contains Substances of Very High Concern above the threshold
California proposition 65	**WARNING: This product can expose you to chemicals including: Lead and lead compounds, which is known to the State of California to cause cancer and birth defects or other reproductive harm. For more information go to www.P65Warnings.ca.gov**

Use Again

Repack and remanufacture

Circularity Profile	End of Life Information
Take-back	**No**
WEEE Label	**The product must be disposed on European Union markets following specific waste collection and never end up in rubbish bins.**

Dimensions Drawings

Dimensions

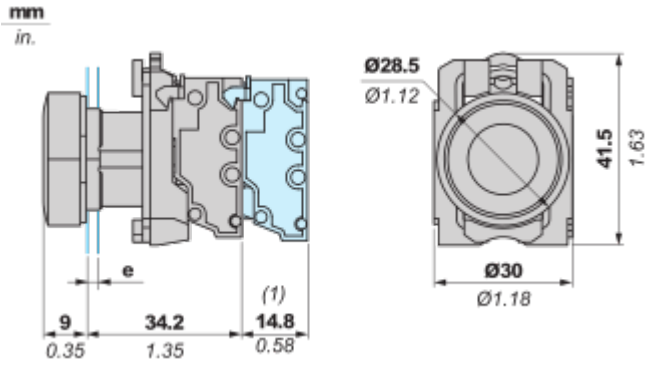

e : Clamping thickness: 1 to 6 mm / 0.04 to 0.24 in.
(1) : Additional row of contacts or double contact

Mounting and Clearance

Mounting

Mounting and Unmounting

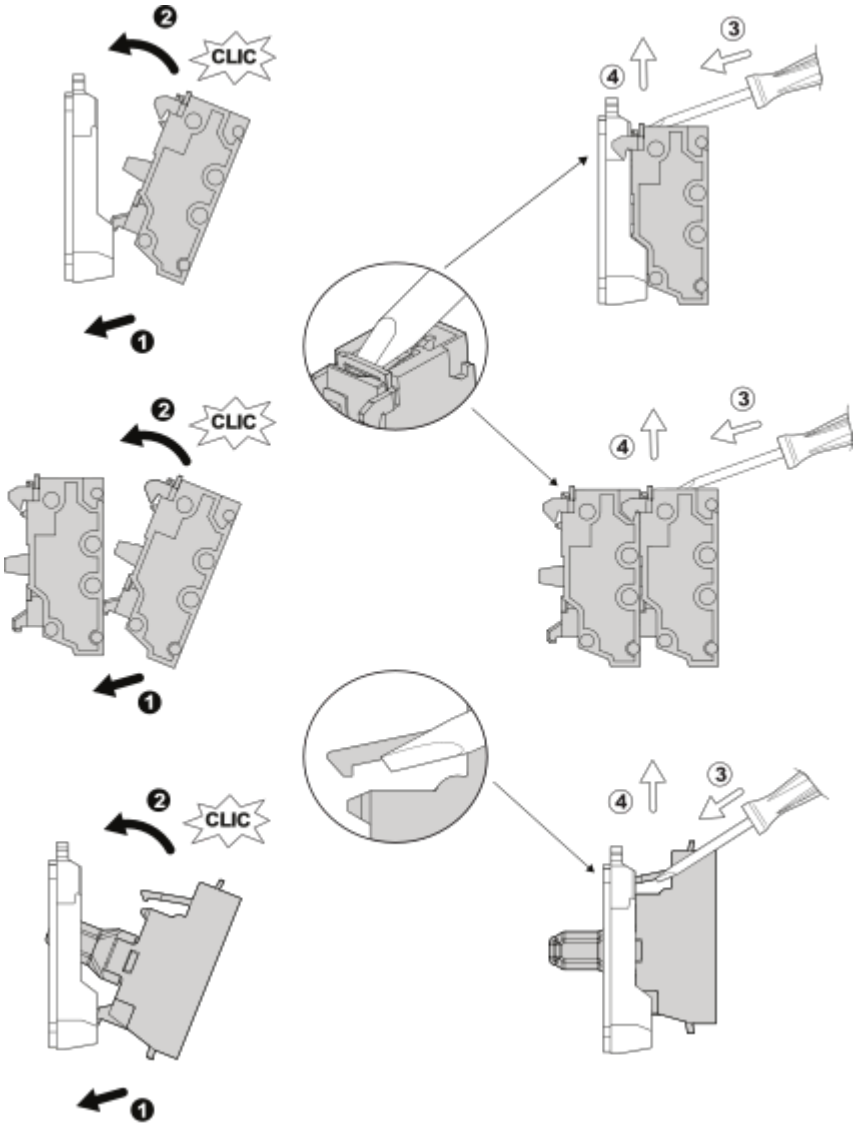

Panel cut-out Dimension

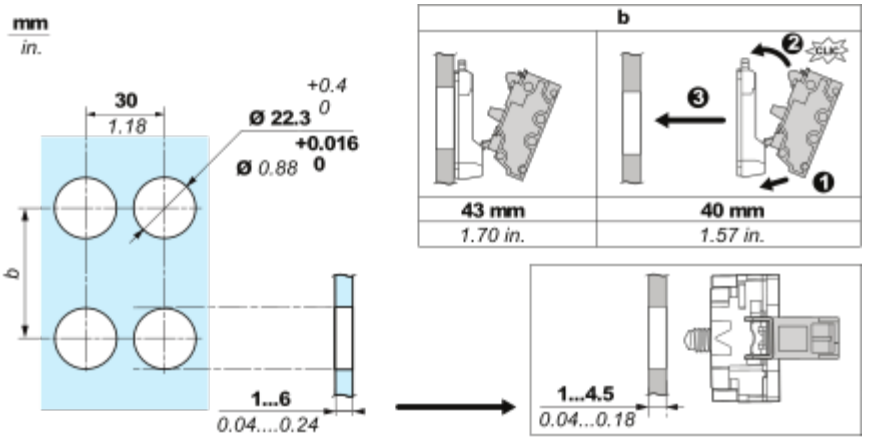
mm
in.
30
1.18
+0.4
0
Ø 22.3
+0.016
Ø 0.88 0
b
1...6
0.04....0.24
b
43 mm
1.70 in.
40 mm
1.57 in.
1...4.5
0.04...0.18

Connections and Schema

Wiring

Wiring and Unwiring



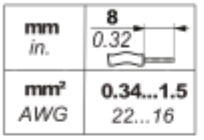

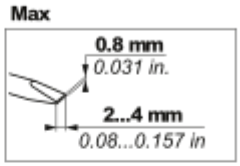

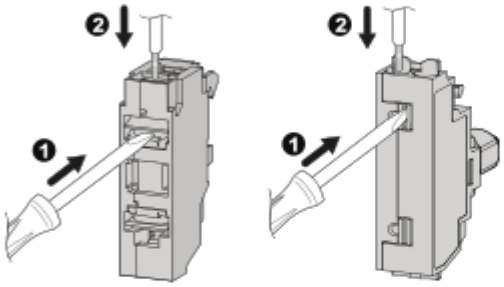

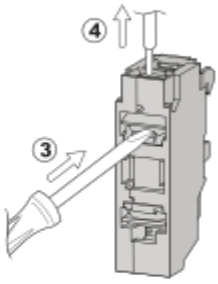

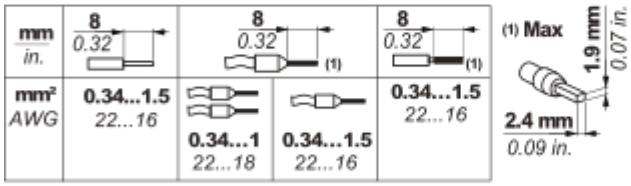

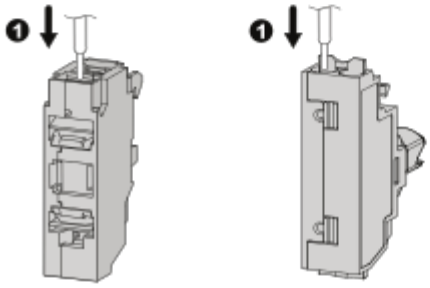

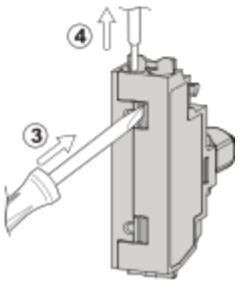

Image of product / Alternate images

Alternative

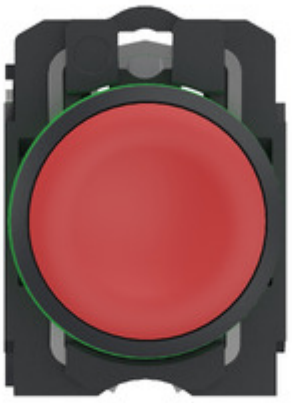

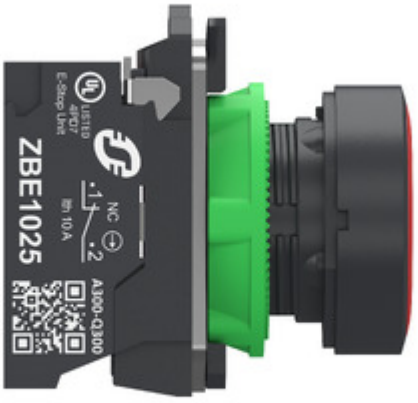


1
NC
2





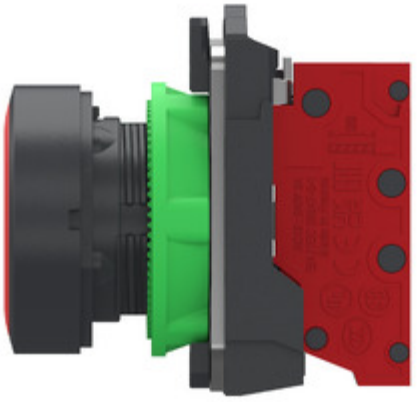

Image of product in real life situation

