Product data sheet

Specifications

Complete push button, Harmony XB6, black flush pushbutton, 16mm, spring return, 1NO + 1NC, unmarked

XB6AA25B

Main

Range of product	Harmony XB6
Product or component type	Complete push-button
Device short name	XB6
Bezel material	Plastic
Mounting diameter	16 mm
Sale per indivisible quantity	1
Shape of signaling unit head	Round
Type of operator	spring return
Operator profile	Black flush, unmarked
Contacts type and composition	1 NO + 1 NC
Contact operation	Slow-break
Connections - terminals	Faston connectors, connection size: 2.8 x 0.5 mm

Complementary

CAD overall width	18 mm
CAD overall height	18 mm
CAD overall depth	57 mm
Terminals description ISO n°1	(13-14)NO (21-22)NC
Net weight	0.022 kg
Operating position	Any position
Positive opening	With conforming to IEC 60947-5-1 appendix K
Operating travel	1 mm (NO changing electrical state) 2 mm (NC changing electrical state) 3.5 mm (total travel)
Operating force	3.5 N NO changing electrical state 4.5 N NC changing electrical state
Mechanical durability	2000000 cycles
Contacts material	Silver alloy (Ag/Ni)
Short-circuit protection	6 A cartridge fuse type gG
[Ui] rated insulation voltage	250 V (pollution degree 3) conforming to IEC 60947-1
[Uimp] rated impulse withstand voltage	4 kV conforming to IEC 60947-1

Disclaimer: This documentation is not intended as a substitute for and is not to be used for determining suitability or reliability of these products for specific user applications

[Ie] rated operational current	3 A at 120 V, AC-15, B300 conforming to IEC 60947-5-1 1.5 A at 240 V, AC-15, B300 conforming to IEC 60947-5-1 0.1 A at 250 V, DC-13, R300 conforming to IEC 60947-5-1 0.22 A at 125 V, DC-13, R300 conforming to IEC 60947-5-1
Electrical durability	1000000 cycles, AC-15 at 230 V, operating rate <3600 cyc/h, load factor: 0.5 conforming to IEC 60947-5-1 appendix C 1000000 cycles, DC-13 at 230 V, operating rate <3600 cyc/h, load factor: 0.5 conforming to IEC 60947-5-1 appendix C
Electrical reliability	Λ = 10exp(-8) at 5 V and 1 mA with confidence level of 90 % conforming to IEC 60947-5-4

Environment

Protective treatment	TC
Ambient air temperature for storage	-40…70 °C
Ambient air temperature for operation	-25…70 °C
Electrical shock protection class	Class II conforming to IEC 61140
IP degree of protection	IP65 conforming to IEC 60529
NEMA degree of protection	NEMA 13 conforming to UL 50 NEMA 4 conforming to UL 50 NEMA 4X conforming to UL 50 NEMA 13 conforming to CSA C22.2 No 94 NEMA 4 conforming to CSA C22.2 No 94 NEMA 4X conforming to CSA C22.2 No 94
Standards	IEC 60947-5-5 UL 508 JIS C 852 IEC 60947-1 CSA C22.2 No 14 JIS C 4520 IEC 60947-5-1
Product certifications	GOST UL CCC CSA
Vibration resistance	+/- 3 mm (f= 2…500 Hz) conforming to IEC 60068-2-6 5 gn (f= 2…500 Hz) conforming to IEC 60068-2-6
Shock resistance	30 gn (duration = 18 ms) for half sine wave acceleration conforming to IEC 60068-2-27 50 gn (duration = 11 ms) for half sine wave acceleration conforming to IEC 60068-2-27

Packing Units

Unit Type of Package 1	PCE
Number of Units in Package 1	1
Package 1 Height	2 cm
Package 1 Width	8 cm
Package 1 Length	8 cm
Package 1 Weight	15 g
Unit Type of Package 2	S01
Number of Units in Package 2	60
Package 2 Height	15 cm
Package 2 Width	15 cm
Package 2 Length	40 cm

Package 2 Weight	1.073 kg

Contractual warranty

Warranty	18 months

Environmental Data

Schneider Electric aims to achieve Net Zero status by 2050 through supply chain partnerships, lower impact materials, and circularity via our ongoing “Use Better, Use Longer, Use Again” campaign to extend product lifetimes and recyclability.

Environmental Data explained >

How we assess product sustainability >

Environmental footprint

Total lifecycle Carbon footprint	1
Environmental Disclosure	Product Environmental Profile

Use Better

Materials and Substances

Packaging made with recycled cardboard	Yes
Packaging without single use plastic	No
EU RoHS Directive	Pro-active compliance (Product out of EU RoHS legal scope)
California proposition 65	WARNING: This product can expose you to chemicals including: Lead and lead compounds, which is known to the State of California to cause cancer and birth defects or other reproductive harm. For more information go to www.P65Warnings.ca.gov

Use Again

Repack and remanufacture

End of life manual availability	End of Life Information
Take-back	No
WEEE Label	The product must be disposed on European Union markets following specific waste collection and never end up in rubbish bins

Dimensions Drawings

Circular Head Pushbutton

Dimensions

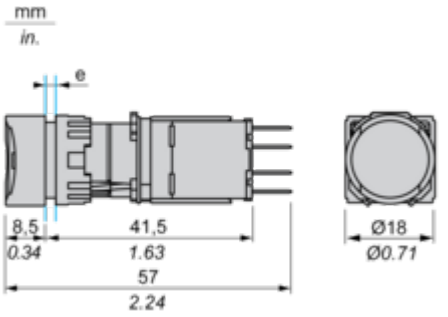

e panel thickness 1 to 6 mm/0.03 to 0.23 in.

Mounting and Clearance

Panel Cut-out

For Square or Circular Head

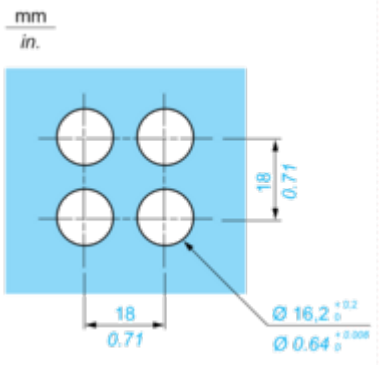

Technical Illustration

Dimensions

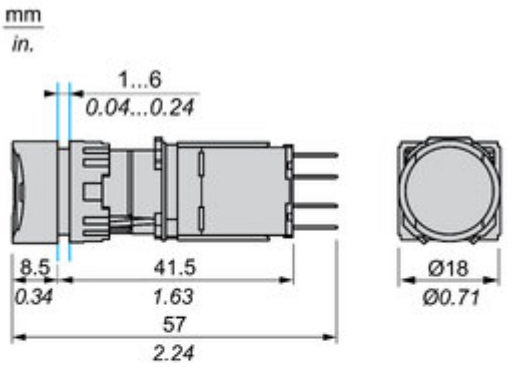

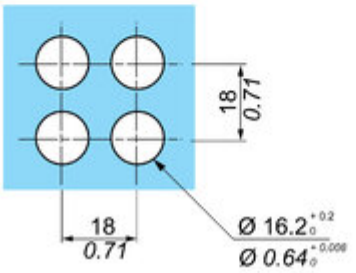

Image of product / Alternate images

Alternative

ZB6-E1B
3
4NO
IEC60947-5-1
B300-R300
IND.CONT.EQ
LISTED 170M
UK
CA

2
3
1

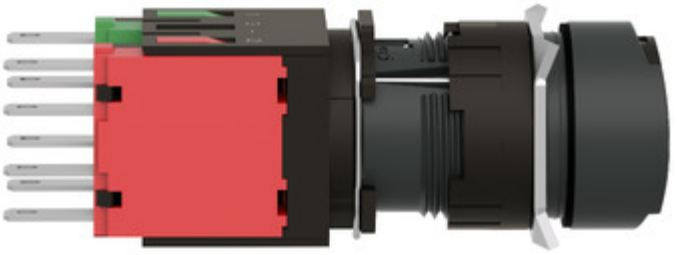

3 NO 4
1 NO 2