SIEMENS

Data sheet 3SU1000-5BC01-0AA0

Siemens EcoTech

Siemens keyswitch, C, 22 mm, round, plastic, lock number S-10-CG, with 2 keys, 2 switch positions O<I, momentary contact type, actuating angle 45°, 10:30h/12h, key removal O

product brand name	SIRIUS ACT
product designation	Key-operated switches
design of the product	Actuating/signaling element
product type designation	3SU1
product line	Plastic, black, 22 mm
manufacturer's article number of included key	3SU1950-0FP80-0AA0
Actuator	
principle of operation of the actuating element	momentary contact, 45° (10:30 h/12 h), return from center to left
product extension optional light source	No
color	
● of the actuating element	silver
material of the actuating element	metal
shape of the actuating element	Key
outer diameter of the actuating element	29.5 mm
number of switching positions	2
switch position for key distraction	O
actuating angle	
● clockwise	45°
lock make	Siemens, C
key number	S-10-CG
Front ring	
product component front ring	Yes
design of the front ring	Standard
material of the front ring	plastic
color of the front ring	black
General technical data	
protection class IP	IP66, IP67, IP69(IP69K)
protection class IP of the terminal	IP20
degree of protection NEMA rating	1, 2, 3, 3R, 4, 4X, 12, 13
shock resistance	
● **according to IEC 60068-2-27**	sinusoidal half-wave 15g / 11 ms
● for railway applications according to EN 61373	Category 1, Class B
vibration resistance	
● **according to IEC 60068-2-6**	10 ... 500 Hz: 5g
● for railway applications according to EN 61373	Category 1, Class B
operating frequency maximum	1 800 1/h
mechanical service life (operating cycles) typical	1 000 000

Subject to change without notice
© Copyright Siemens

reference code according to IEC 81346-2	S
Substance Prohibitance (Date)	10/01/2014
SVHC substance name	Lead - 7439-92-1
Weight	132 g
Safety related data	
proportion of dangerous failures	
● with low demand rate according to SN 31920	20 %
● with high demand rate per NC contact according to SN 31920	20 %
● with high demand rate per NO contact according to SN 31920	50 %
B10 value with high demand rate according to SN 31920	500 000
failure rate [FIT] with low demand rate per NC contact according to SN 31920	100 FIT
IEC 61508	
T1 value for proof test interval or service life according to IEC 61508	20 a
Ambient conditions	
ambient temperature	
● during operation	-25 ... +70 °C
● during storage	-40 ... +80 °C
environmental category during operation according to IEC 60721	3M6, 3S2, 3B2, 3C3, 3K6 (with relative air humidity of 10 ... 95%)
Environmental footprint	
Environmental Product Declaration(EPD)	Yes
global warming potential [CO2 eq] total	0.787 kg
global warming potential [CO2 eq] during manufacturing	0.566 kg
global warming potential [CO2 eq] during operation	0.235 kg
global warming potential [CO2 eq] after end of life	-0.015 kg
Siemens Eco Profile (SEP)	Siemens EcoTech
Installation/ mounting/ dimensions	
height	29.5 mm
width	29.5 mm
shape of the installation opening	round
mounting diameter	22.3 mm
positive tolerance of installation diameter	0.4 mm
mounting height	61 mm
installation width	29.5 mm
installation depth	25.4 mm

Approvals Certificates

General Product Approval	Test Certificates	
CE EG-Konf. UKCA cULus EAC	Special Test Certificate	Type Test Certificates/Test Report

Maritime application			other		Environment
Lloyd's Register LRS	PRS	RINA	产品合格 QC PASS	Confirmation	EPD

Environment
Siemens EcoTech Environmental Confirmations

Subject to change without notice
© Copyright Siemens

Further information

Information on the packaging
https://support.industry.siemens.com/cs/ww/en/view/109813875
Information for data generation and storage
https://support.industry.siemens.com/cs/ww/en/view/109995012
Information- and Downloadcenter (Catalogs, Brochures,…)
https://www.siemens.com/ic10
Industry Mall (Online ordering system)
https://mall.industry.siemens.com/mall/en/en/Catalog/product?mlfb=3SU1000-5BC01-0AA0
Cax online generator
http://support.automation.siemens.com/WW/CAXorder/default.aspx?lang=en&mlfb=3SU1000-5BC01-0AA0
Service&Support (Manuals, Certificates, Characteristics, FAQs,...)
https://support.industry.siemens.com/cs/ww/en/ps/3SU1000-5BC01-0AA0
Image database (product images, 2D dimension drawings, 3D models, device circuit diagrams, EPLAN macros, ...)
http://www.automation.siemens.com/bilddb/cax_de.aspx?mlfb=3SU1000-5BC01-0AA0&lang=en

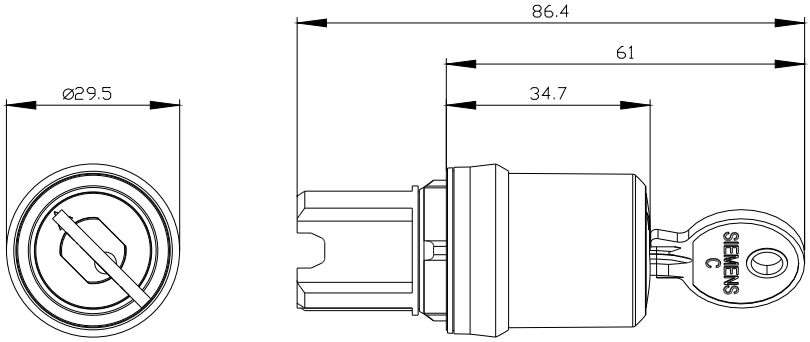

last modified: 6/3/2025

Subject to change without notice
© Copyright Siemens