SIEMENS

Data sheet 8WD4408-0AB

Connection element, with end cover, black, for floor/angle mounting, with screw terminal,

product brand name	SIRIUS
product designation	Connection element
design of the product	for floor and bracket mounting,
General technical data	
reference code according to EN 61346-2	X
Enclosure	
height	42.5 mm
width	70 mm
outer diameter of the signal column element	70 mm
material	PA
color	black
fastening method	Floor/bracket mounting
protection class IP	IP65
type of electrical connection	screw terminal
tightening torque with screw-type terminals	0.4 N·m
Ambient conditions	
ambient temperature during operation	-20 ... +50 °C
Approvals Certificates	

General Product Approval					EMV
Confirmation	CE EG-Konf.	UKCA	cULus	EAC	RCM

other	Environment
Confirmation	Environmental Confirmations

Further information

Information on the packaging
https://support.industry.siemens.com/cs/ww/en/view/109813875
Information- and Downloadcenter (Catalogs, Brochures,…)
https://www.siemens.com/ic10
Industry Mall (Online ordering system)
https://mall.industry.siemens.com/mall/en/en/Catalog/product?mlfb=8WD4408-0AB
Cax online generator
http://support.automation.siemens.com/WW/CAXorder/default.aspx?lang=en&mlfb=8WD4408-0AB
Service&Support (Manuals, Certificates, Characteristics, FAQs,...)

Subject to change without notice
© Copyright Siemens

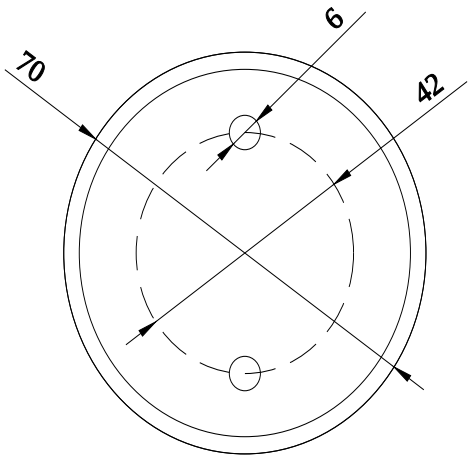

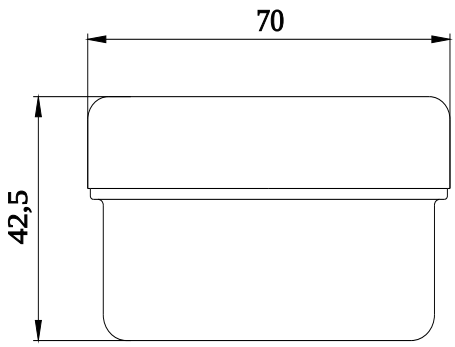

Standard

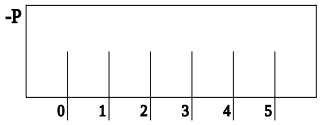

ASI

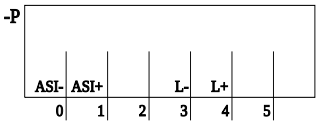

IO-Link

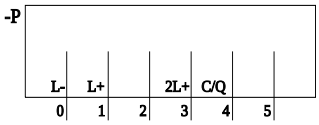

Subject to change without notice
© Copyright Siemens

Subject to change without notice
© Copyright Siemens