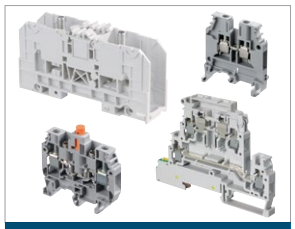

# SNA SERIES TERMINAL BLOCKS

ENTRELEC Terminal Blocks

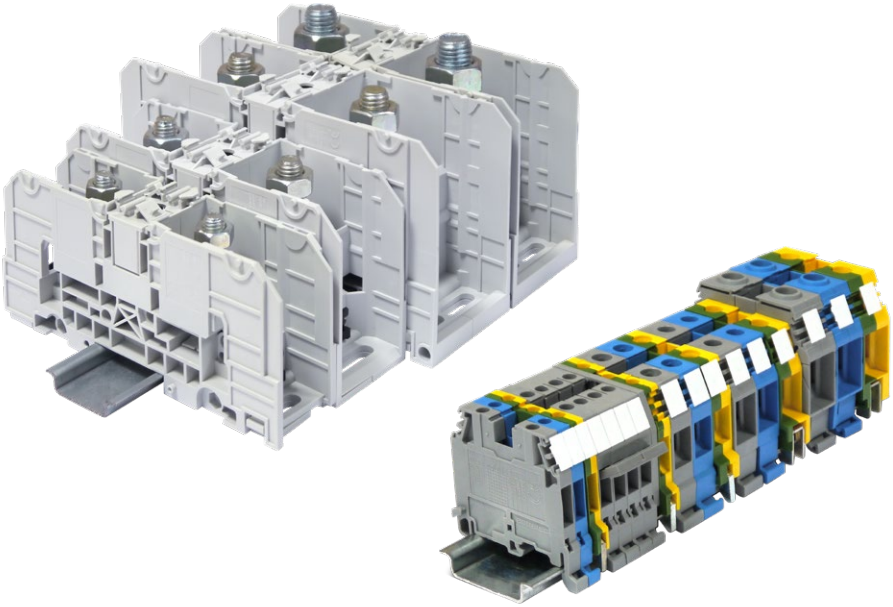

# SNA series
## Terminal blocks


Ranges and technologies presentations 2

Screw clamp terminal blocks 9

Stud terminal blocks 89

Index 102


1SNC160051S0201

1-1773971-1_EN - Edition April 2019

# ENTRELEC terminal blocks offering

TE Connectivity proposes one of the largest connection offering on the market with various technologies: screw, PI-Spring, spring, IDC, pluggable, stud, etc. technologies found in over 8000 products & solutions.

| | SNK & SNA standard terminal blocks | | Specific technologies | | Terminal blocks for railway applications |
|---|---|---|---|---|---|
| | 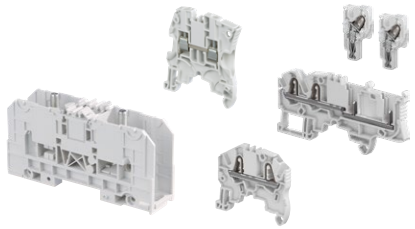 | | | | 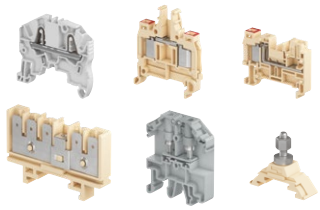 |
| Scope | Qualified for worldwide applications and severe environments (such as hazardous locations, railways, marine and solar applications..).<br>From 0.2 to 300 mm². | | Specific terminal blocks and technologies for dedicated applications and markets. | | The largest offering on the market for rolling stock and infrastructures. |
| Product families & functions | SNK PI-Spring technology<br>2.5 to 16 mm²<br>12 to 4 AWG | Feed-through<br>Multi-deck<br>Ground<br>Disconnect<br>for fuses<br>Component holder | ADO System® (IDC)<br>0.22 to 4 mm²<br>24 to 12 AWG | ADO-ADO or ADO-screw clamp<br>Feed-through / Multi-deck /<br>Ground / Disconnect /<br>for fuses / Component holder | SNK PI-Spring technology<br>2.5 to 16 mm²<br>12 to 4 AWG |
| | | | Safety (spring loaded)<br>0.22 to 10 mm²<br>24 to 6 AWG | Feed-through<br>Disconnect<br>Test & measurement | SNK pluggable<br>screw & PI-Spring technologies<br>2.5 to 4 mm²<br>12 to 10 AWG |
| | SNK screw clamp technology<br>4 to 240 mm²<br>12 to 500 Kcmil | Feed-through<br>Multi-deck<br>Ground<br>Disconnect<br>for fuses<br>Test & measurement<br>Marshalling<br>Component holder | Stud<br>25 to 120 mm²<br>2 AWG to 500 Kcmil | One stud<br>2 studs<br>One stud - One wire-clamp | ADO System® (IDC)<br>1.5 to 4 mm²<br>16 to 12 AWG |
| | | | Ring lug<br>2.5 to 25 mm²<br>14 to 4 AWG | Feed-through<br>Test & measurement | Stud<br>4 to 185 mm² |
| | SNK pluggable<br>screw & PI-Spring technologies<br>2.5 to 4 mm²<br>12 to 10 AWG | Feed-through<br>Multi-deck<br>Ground | Miniblocks<br>1.5 to 6 mm²<br>18 to 8 AWG | Screw clamp<br>Spring<br>ADO System® (IDC) | Quick-connect<br>2.5 to 6 mm² |
| | SNA Stud<br>35 to 300 mm²<br>1 AWG to 1000 Kcmil | Feed-through<br>Stud-stud<br>Hybrid<br>Stud-screw | Other types<br>Test & measurement: with sliding link, blade, plug<br>Pluggable: feed-through, double deck, disconnect<br>Sensors/actuators: screw, spring, ADO system (IDC)<br>Installation: screw, spring<br>Protection: ground + neutral<br>Component holders: screw, spring, ADO system (IDC) | | |

www.te.com

| | DBL power distribution blocks | ESSAILEC® test blocks | Interfast PLC pre-wiring system | Marking solutions |
|---|---|---|---|---|
| | | | | |
| | The preferred choice for primary power distribution and solar applications. | Test blocks for safe and easy testing on secondary circuits of current and voltage transformers and sensors. | PLC pre-wiring system for fast, flexible, reliable connection of PLC's in process automation applications. | Markers & marking systems for all identification requirements in electrical panels. |
| | From 80 A up to 550 A (IEC)<br><br>Modular blocks: single pole, three & four poles, up to 12 outputs<br><br>Terminal blocks types:<br>2 to 10 poles, up to 20 outputs | Current and voltage sockets & plugs<br><br>Simultaneous testing of 1 to 4 independent circuits on the same socket<br><br>Several testing principle such as "make before break" for safe current transformer testing<br><br>Panel and switchboard mounting : base, flush, rack, TH35 rail<br><br>Multicircuits sockets & plugs | Interfast PCB:<br>Compact & standard modules<br><br>Interfast MS:<br>Modular system based on terminal block technology<br><br>Functions:<br>– 1 to 4 wire connections (sensors)<br>– Disconnect<br>– Fuse<br>– Signal indication<br>– Relays<br>– Optocouplers<br>– Solenoid valve control<br>– Galvanic isolation (2.5 kV). | Terminal block identification and group markers<br><br>Wire and cable identification<br><br>Component and equipment identification<br><br>Panel identification<br><br>Pre-printed markers for terminal blocks |

1SNC160261S0201

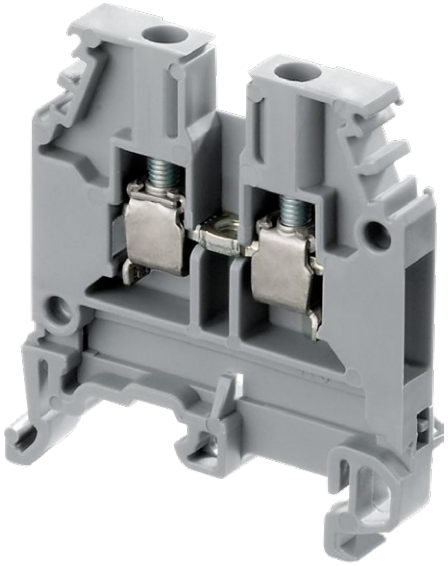

## Rely on our expertise

The TE Connectivity screw clamp technology benefits from 50 years of experience.
Billions of our screw clamps have been manufactured and are used worldwide every day in all kinds of applications.

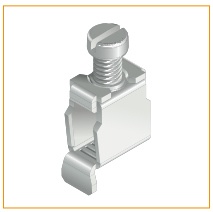

**Qualified for worldwide markets and applications**
**Eco-designed according to international environmental standards in sustainable development.**

CE RoHS c UL us CSA PCT ME01 ISO 9001 ISO 14001

## The proven reliability to support your daily connection challenges

### Manufactured since decades

**Robust design & high quality** standards (UL94-V0, RoHS).
Many functions available for a very **wide scope** of industrial applications.

### Facilitate your rail assembly process

10 pre-assembled blocks for **quick plug-in mounting**.
Asymmetrical shape: easy to handle, **prevents risk of short-circuit**.
Conductor insertion is very easy: the conductor entry is **angled to guide the conductor** into the clamp.
A flap under the clamp avoids conductor to be pushed underneath the clamp.
Universal: **mounting on TH 35 and G rails**.

### Quick and efficient marking solutions

Markers come by strips of 10.
Central and lateral marking allow a clear visualisation from any angle.

10 pre-assembled blocks

Quick labelling thanks to strips

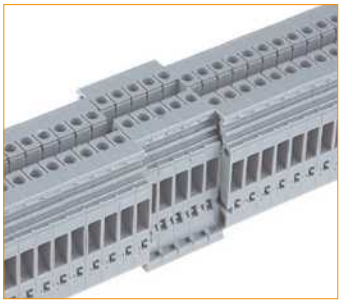

100% safe-visible backwards mounting

Multi rail mounting

1SNC161116S0201

# Screw clamp technology
The heavy duty connection

### Unique design, flies over time thanks to its reliability and safety
The TE Connectivity screw clamp technology is designed to avoid accidental releases due to vibrations, shocks or even abusive cable draw. Our exclusive design minimizes the needs of retightening campaigns.

### High density capacity
The screw clamp technology can fit up to two conductors per clamp which offers extended possibilities in electrical cabinets.

1

## Features

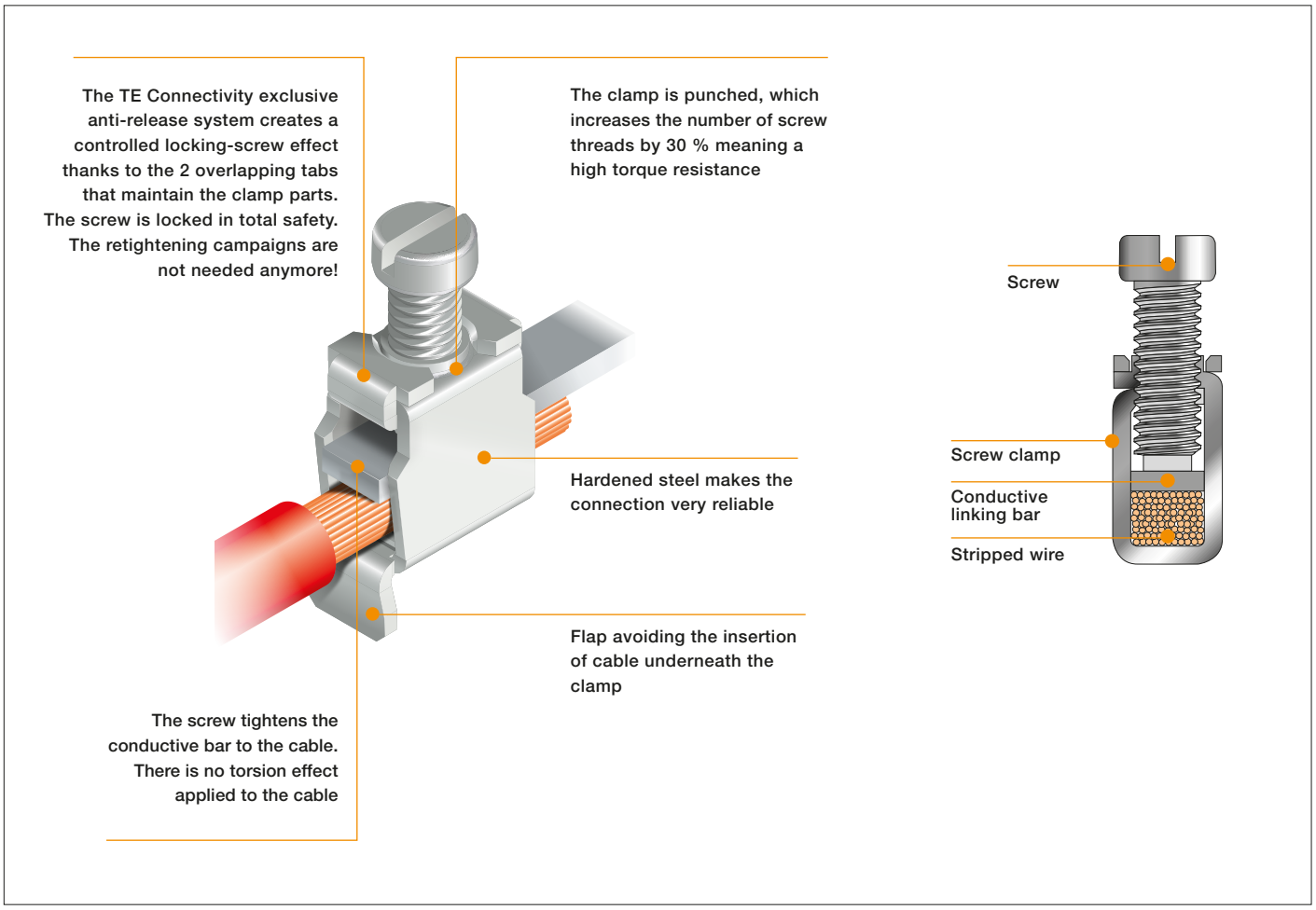


## From 0.22 mm² up to 240 mm²
From 24 AWG up to 500 Kcmil

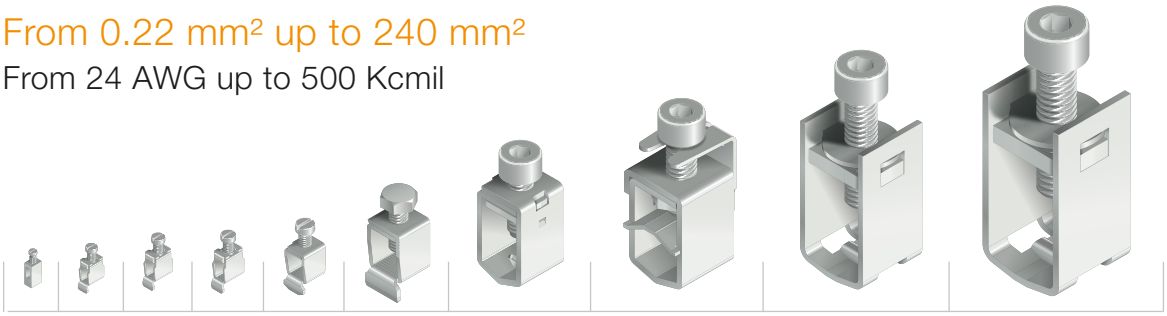

1SNC161117S0201

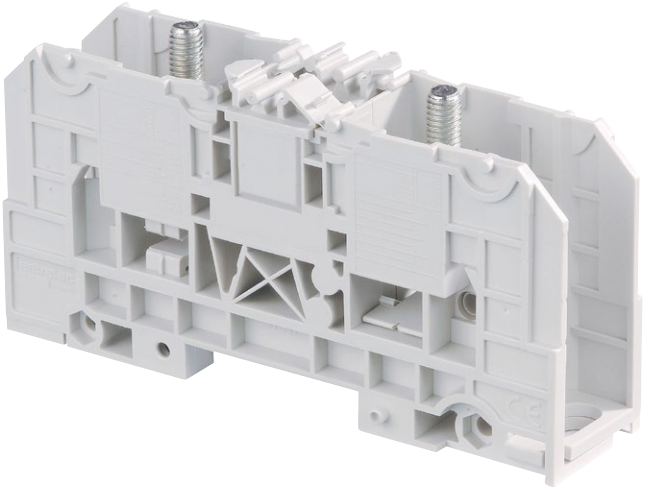

TE Connectivity proposes a large scope of power terminal blocks dedicated to the connection and distribution of power into electrical installations. Power terminals blocks features standard stud-stud connections as well as hybrid terminals (stud-screw clamp).

**Qualified for worldwide markets and applications**
**Eco-designed according to international environmental standards in sustainable development.**

RoHS ISO 9001 ISO 14001

# The power distribution terminal blocks

### Functionality through ergonomic design

Removable protective covers are designed to increase the **safety of cabinets**, ease the wiring process thanks to its rotative feature.
A **central movable protection** gives access to the jumpering location, and ensures the IP20 isolation.
High quality standards (UL94-V0, RoHS...).

### Facilitate your rail assembly process

Various mounting options:
- **Plate mounting** thanks to 2 holes
- **Rail mounting** with bistable foot.

Terminal blocks can be **tight together** thanks to the usage of a threaded stud and nuts.
Pins allow terminal blocks to be **snapped together** for better stability during the tightening process.

### Efficient marking

Many marking options: on the center or on the covers with standard markers or adhesive labels.

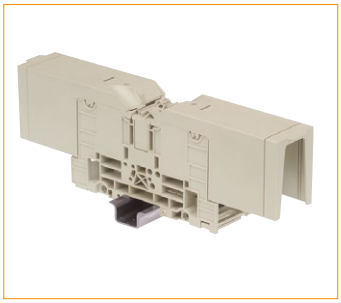

Rotating protective covers

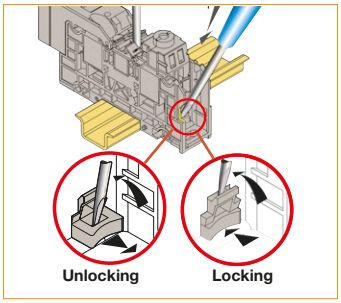


Bistable mounting foot

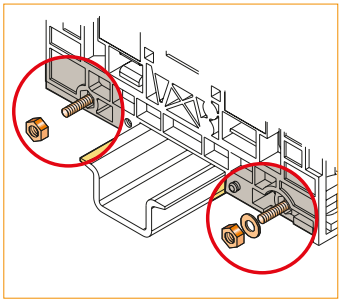

Assembly with stud & snap on pins

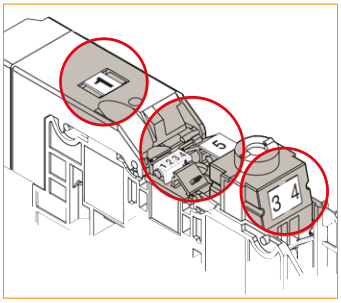

Marking options

1SNC165001S0201

# TE Connectivity stud & screw clamp technology
The preferred connection for power

### Reliability first
The TE Connectivity stud and screw clamp are designed to ensure the reliability of connection, and are particularly adapted to high currents requirements. The TE Connectivity connection technology includes vibration resistant washers combined with highly resistant steel parts to obtain heavy duty usage.



## Features

### Stud

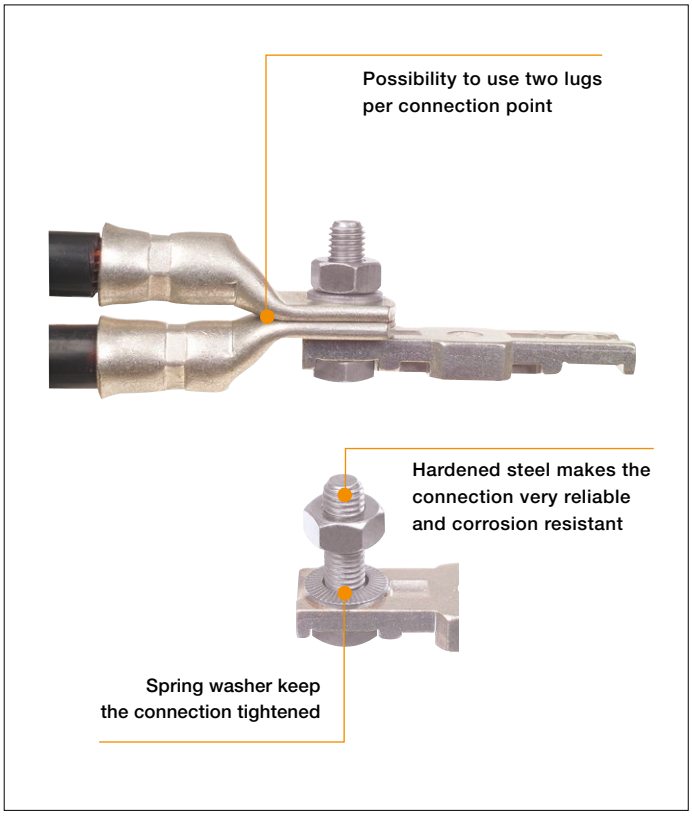


### Screw clamp

## Up to 300 mm² / 1000 Kcmil

| M6 | M8 | M10 | M12 | M16 |
|---|---|---|---|---|
| 35 mm² | 70 mm² | 120 mm² | 185 mm² | 300 mm² |
| 1 AWG | 000 AWG | 300 Kcmil | 500 Kcmil | 1000 Kcmil |

1SNC165002S0201

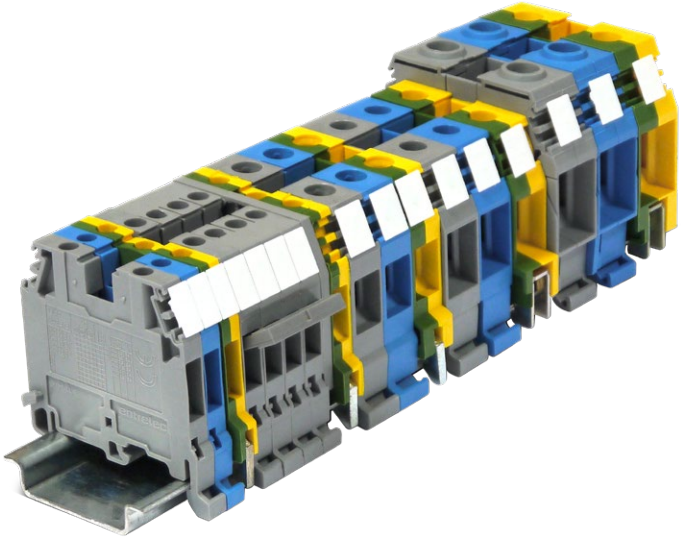

1SNC161120S0201

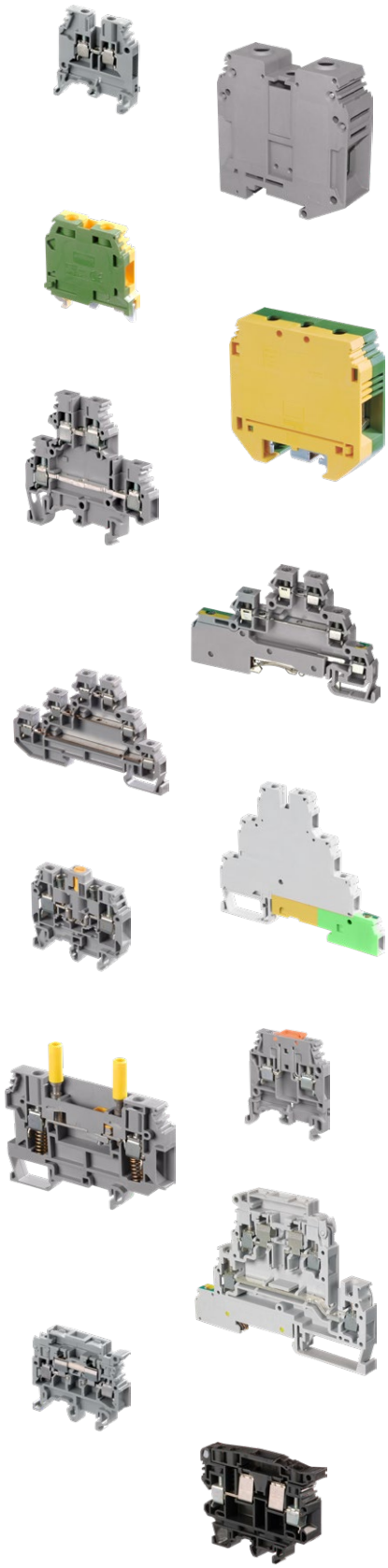


| | | | |
|---|---|---|---|
| Overview | | | 10 |
| **Feed-through** | | | |
| 2.5 mm² / 12 AWG | **MA2.5/5** | | 12 |
| 4 mm² / 10 AWG | **M4/6** | | 14 |
| | **M4/6.3A & M4/6.4A** | 3 & 4 connections | 16 |
| 6 mm² / 8 AWG | **M6/8** | | 18 |
| 10 mm² / 6 AWG | **M10/10** | | 20 |
| 16 mm² / 6 AWG | **M16/12** | | 22 |
| 35 mm² / 0 AWG | **M35/16** | | 23 |
| 70 mm² / 00 AWG | **D70/22** | | 24 |
| 95 mm² / 0000 AWG | **D95/26** | | 25 |
| 150 mm² | **D150/31.D10** | | 26 |
| 240 mm² | **D240/36.D10** | | 27 |
| **Ground** | | | |
| 2.5 mm² / 12 AWG | **MA2.5/5.P & D2.5/5.P** | | 28 |
| 4 mm² / 12 AWG | **M4/6.P & D4/6.P** | | 30 |
| | **M4/6.3A.P & M4/6.4A.P** | 3 & 4 connections | 32 |
| 6 mm² / 8 AWG | **M6/8.P & D6/8.P** | | 34 |
| 10 mm² / 6 AWG | **M10/10.P** | | 36 |
| 16 mm² / 4 AWG | **M16/12.P** | | 37 |
| 35 mm² / 0 AWG | **M35/16.P** | | 38 |
| 70 mm² / 00 AWG | **D70/22.P** | | 39 |
| 95 mm² / 0000 AWG | **D95/26.P** | | 40 |
| **Double deck** | | | |
| 2.5 mm² / 12 AWG | **MA2.5/5.D2** | | 42 |
| 4 mm² / 12 AWG | **M4/6.D2** | | 44 |
| | **M4/6.D1** | One circuit | 46 |
| 6 mm² / 8 AWG | **M6/8.D2** | | 48 |
| 2.5 mm² / 12 AWG | **D2.5/5.DP** | Double deck + ground | 50 |
| **Triple deck** | | | |
| 2.5 mm² / 12 AWG | **D2.5/6.DA** | | 51 |
| 4 mm² / 12 AWG | **D4/6.T** | | 52 |
| | **D4/6.P.T1** | 7 connections for grounding | 54 |
| **Disconnect** | | | |
| 2.5 mm² / 12 AWG | **MA2.5/5.SNB** | | 56 |
| 4 mm² / 10 AWG | **M4/6.SNB** | | 58 |
| 6 mm² / 8 AWG | **M6/8.SNB** | | 60 |
| 4 mm² / 12 AWG | **M4/6.D2.SNBT** | Double deck, disconnect | 61 |
| 4 mm² / 10 AWG | **M4/6.SB & M6/8.SB** | Disconnect with plug | 62 |
| 4 mm² | **M4/6.D2.SB** | Double deck, disconnect with plug | 64 |
| 6 mm² / 8 AWG | **M6/8.STP** | Disconnect with push-turn knob | 66 |
| | **M6/8.STP3** | Feed-through - profile aligned with M6/8.STP | 67 |
| | **M6/8.ST** | Test disconnect with screwdriver sliding link | 67 |
| | **M6/8.ST7** | Feed-through - profile aligned with M6/8.ST | 73 |
| **For 5x20 and 5x25 mm fuses** (0.197x0.787 in and 0.197x0.984 in) | | | |
| 4 mm² / 12 AWG | **M4/8.SF** | Fuse holders | 74 |
| | **M4/8.SN** | Disconnect - profile aligned with M4/8.SF | 78 |
| | **M4/8** | Feed-through - profile aligned with M4/8.SF | 79 |
| | **M4/8.D2.SF** | Double deck, fuse holder | 80 |
| | **D4/8.D2.P.SF** | Double deck, fuse holder, ground | 82 |
| **For 6.3x25 and 6.3x32 mm fuses** (¼ x 1 in and ¼ x 1¼ in) | | | |
| 10 mm² / 10 AWG | **ML10/13.SF** | | 84 |
| | **ML10/13.SN** | Disconnect - profile aligned with ML10/13.SF | 86 |


2

1SNC161120S0201

# SNA series, terminal blocks
## Screw clamp technology

Screw rail connection

Screwless rail connection

| Section | | Feed-through | | Ground | | | | Double deck | |
|---|---|---|---|---|---|---|---|---|---|
| IEC | UL/CSA | | | | | | | | |
| 2.5 mm² | 12 AWG | MA2.5/5 | 5 mm 0.197 in | MA2.5/5.P | 5 mm 0.197 in | D2.5/5.P | 5 mm 0.197 in | MA2.5/5.D2 | 5 mm 0.197 in |
| 4 mm² | 10-12 AWG | M4/6 | 6 mm 0.236 in | M4/6.P | 6 mm 0.236 in | D4/6.P | 6 mm 0.236 in | M4/6.D2 | 6 mm 0.236 in |
| 6 mm² | 8 AWG | M6/8 | 8 mm 0.315 in | M6/8.P | 8 mm 0.315 in | D6/8.P | 8 mm 0.315 in | M6/8.D | 8 mm 0.315 in |
| 10 mm² | 6-10 AWG | M10/10 | 10 mm 0.394 in | M10/10.P | 10 mm 0.394 in | | | | |
| 16 mm² | 4-6 AWG | M16/12 | 12 mm 0.472 in | M16/12.P | 12 mm 0.472 in | | | | |
| 35 mm² | 0-2 AWG | M35/16 | 16 mm 0.630 in | M35/16.P | 16 mm 0.630 in | | | | |
| 70 mm² | 00 AWG | D70/22 | 22 mm 0.866 in | D70/22.P | 22 mm 0.866 in | | | | |
| 95 mm² | 0000 AWG | D95/26 | 26 mm 1.024 in | D95/26.P | 26 mm 1.024 in | | | | |
| 150 mm² | | D150/31.D10 | 31 mm 1.220 in | | | | | | |
| 240 mm² | | D240/36.D10 | 36 mm 1.417 in | | | | | | |

| Section | | Disconnect with blade | | | | Disconnect with plug | | | |
|---|---|---|---|---|---|---|---|---|---|
| IEC | UL/CSA | | | | | | | | |
| 2.5 mm² | 12 AWG | MA2.5/5.SNB.. | 5 mm 0.197 in | | | | | | |
| 4 mm² | 10-12 AWG | M4/6.SNB.. | 6 mm 0.236 in | M4/6.D2.SNBT | 6 mm 0.236 in | M4/6.SB | 6 mm 0.236 in | M4/6.D2.SB | 6 mm 0.236 in |
| 6 mm² | 8 AWG | M6/8.SNB | 8 mm 0.315 in | | | M6/8.SB | 8 mm 0.315 in | | |

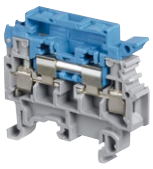

**For 5 x 20 mm and 5 x 25 mm fuses** (0.197" x 0.787" and 0.197" x 0.984")

| Section | | | | | | | |
|---|---|---|---|---|---|---|---|
| IEC | UL/CSA | | | | | | |
| 4 mm² | 10-12 AWG | M4/8.SF | 8 mm 0.315 in | M4/8.SN | 8 mm 0.315 in | M4/8 | 8 mm 0.315 in |
| 10 mm² | 10 AWG | | | | | | |

Terminal - Hole for testing or jumpering - Testing point - Fuse holder - Blown-fuse indicator - Ground connection, linked to the DIN rail

Interconnection between decks - Disconnect function - Quarter turn disconnect function - Sliding link disconnect function

1SNC161115S0201

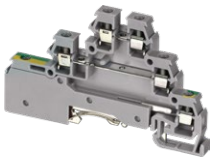

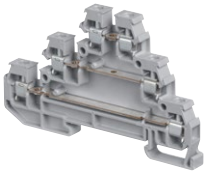

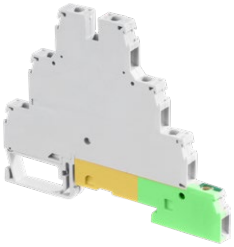

## Double deck + ground

| | |
|---|---|
| D2.5/6.DP | 5 mm 0.197 in |

## Triple deck

| | |
|---|---|
| D2.5/6.DA | 5 mm 0.197 in |
| D4/6.T | 6 mm 0.236 in |

## Triple deck + ground

| | |
|---|---|
| D4/6.T3.P | 6 mm 0.236 in |

| | |
|---|---|
| D4/6.P.T1 | 6 mm 0.236 in |

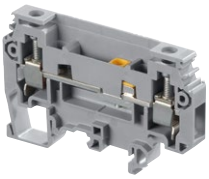

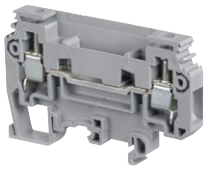

## Disconnect with push-turn knob

| | |
|---|---|
| M6/8.STP | 8 mm 0.315 in |



| | |
|---|---|
| M6/8.STP3 | 8 mm 0.315 in |

## Test disconnect

| | |
|---|---|
| M6/8.ST | 8 mm 0.315 in |



| | |
|---|---|
| M6/8.ST7 | 8 mm 0.315 in |

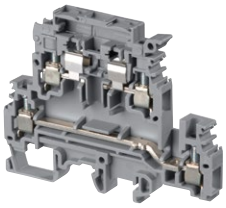

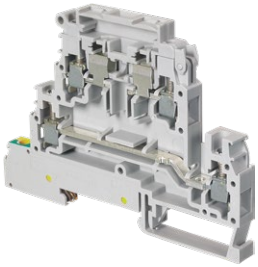

## Double deck - For 5 x 20 mm and 5 x 25 mm fuses (0.197" x 0.787" and 0.197" x 0.984")

| | |
|---|---|
| M4/8.D2.SF | 8 mm 0.315 in |

| | |
|---|---|
| D4/8.D2.P.SF | 8 mm 0.315 in |

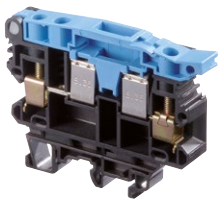

## For 6.3 x 25 and 6.3 x 32 mm fuses (¼" x 1" and ¼" x 1¼")

| | |
|---|---|
| ML10/13.SF | 13 mm 0.512 in |



| | |
|---|---|
| ML10/13.SN | 13 mm 0.512 in |



1SNC161115S0201

# MA2.5/5 screw clamp terminal blocks
## Feed-through - 5 mm 0.197 in spacing

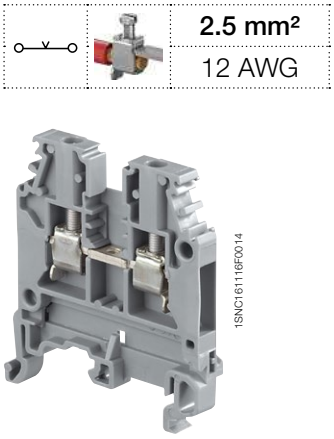


MA2.5/5




**5 mm** 0.197 in spacing

**2.5 mm²**
12 AWG

### Description

- Flexibility: snap onto symmetrical and asymmetrical rails,
- Many colors are available in addition to our generic grey, to help you quickly identify any of specific functions.

### Ordering details

| Description | Color | Type | Part Number | Pkg qty | Weight (1 pce) g |
|---|---|---|---|---|---|
| Feed-through | Grey | MA2.5/5 | 1SNA115486R0300 | 50 | 6.61 |
| | Blue | MA2.5/5.N | 1SNA125486R0500 | 50 | 6.61 |
| | Orange | MA2.5/5 | 1SNA105075R2000 | 50 | 6.61 |
| | Yellow | MA2.5/5 | 1SNA105486R1200 | 50 | 6.61 |
| | Red | MA2.5/5 | 1SNA400184R2700 | 50 | 6.61 |
| | White | MA2.5/5 | 1SNA105052R2100 | 50 | 6.61 |
| | Black | MA2.5/5 | 1SNA105077R2200 | 50 | 6.61 |
| | Beige | MA2.5/5 | 1SNA195486R0400 | 50 | 6.61 |

### Main technical data

| Connecting capacity | | IEC | UL | CSA |
|---|---|---|---|---|
| 1 conductor per clamp | Rigid - Solid / Stranded | 0.2-4 mm² | 22-12 AWG | 22-12 AWG |
| | Flexible | 0.22-2.5 mm² | | |
| | with insulated ferrule | | | |
| | Gauge | A3 | | |
| Rated current / Rated cross section | | 24 A / 2.5 mm² | 30 A / 12 AWG | 25 A / 12 AWG |
| Rated short-time withstand current (1s) | | 300 A | | |
| Rated voltage | | 1000 V | 600 V | 600 V |
| Impulse withstand voltage | | 8000 V | | |
| Protection | | IP20 | NEMA 1 | |

### Mounting instructions

| | |
|---|---|
| Rail | G32, TH 35-7.5, TH 35-15 |
| Wire stripping length | 10 mm<br>0.39 in |
| Tool | Flat screwdriver<br>Ø 3.5 mm<br>Ø 0.137 in |
| Torque | 0.4 - 0.6 N.m<br>3.5 - 5.3 lb.in |

The connecting capacity data for one Rigid - Solid / Stranded - Flexible conductor (when applicable) is a mandatory information required by IEC, UL and CSA standards.
All other data are provided as supplementary information only. For more details, please consult our CB, UL or CSA certificates and technical datasheet available on http://www.te.com

CE RoHS USR CNR cCSAus Gost R

### Accessories

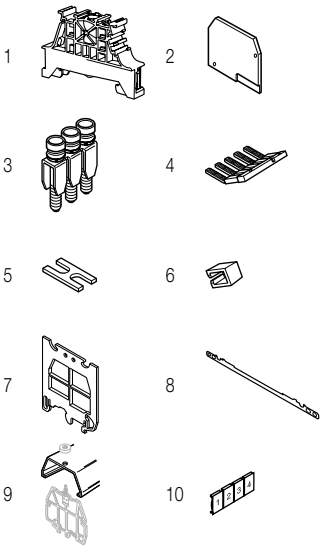


| | Description | | | Color | Type | Part Number | Pkg qty | Weight (1 pce) g |
|---|---|---|---|---|---|---|---|---|
| 1 | End stops | 10 mm | 0.394 in | Grey | BAM4 | 1SNK900001R0000 | 50 | 12.00 |
| | | 9 mm | 0.354 in | | BAZ1 | 1SNK900002R0000 | 50 | 4.70 |
| 2 | End sections | 2.8 mm | 0.110 in | Grey | FEM6 | 1SNA118368R1600 | 20 | 2.40 |
| 3 | Jumper bars | 2 poles | 24 A | | BJMI5-2 | 1SNA176278R1600 | 10 | 3.30 |
| | | 3 poles | | | BJMI5-3 | 1SNA176279R1700 | 10 | 5.00 |
| | | 4 poles | | | BJMI5-4 | 1SNA176280R0500 | 10 | 6.70 |
| | | 5 poles | | | BJMI5-5 | 1SNA176281R2200 | 10 | 8.40 |
| | | 10 poles | | | BJMI5-10 | 1SNA176282R2300 | 10 | 16.90 |
| 4 | Lateral jumper bars | 2 poles | 30 A | Grey | PC5-2 | 1SNA113542R1000 | 10 | 1.80 |
| | | 10 poles | | | PC5-10 | 1SNA113544R1200 | 10 | 6.00 |
| 5 | Cross spacing jumpers | 5 mm 0.200 in - 6 mm 0.236 in - 8 mm 0.315 in | | | EL6 | 1SNA173627R2100 | 10 | 0.10 |
| 6 | Insulating tips | For lateral jumper bars type PC... | | | EIP | 1SNA113550R2400 | 10 | |
| 7 | Circuit separators | 3 mm | 0.118 in | Grey | SCFM6 | 1SNA114825R0500 | 20 | 4.00 |
| | | 0 mm | 0 in | | SCMA5 | 1SNA116728R2500 | 10 | |
| | | 3 mm | 0.118 in | | SCFCV1-2 | 1SNA116795R1100 | 10 | 8.00 |
| | | | | | SCF6 | 1SNA118707R0300 | 20 | |
| 8 | Shield connectors | | | | CBM5 | 1SNA178745R1400 | 50 | |
| 9 | Protecting covers | Length 1 m 39 in | | Transparent | CPV1-2 | 1SNA176816R1200 | 1 | |
| | | Length 500 mm 19.70 in | | | CPM | 1SNA187312R1400 | 1 | |
| 10 | Terminal block markers | Blank card | | White | RC510 | 1SNA231000R0700 | 1 | 5.20 |

Complete list of accessories is indicated in the terminal block datasheet.
Some accessories such as jumper bars may modify the terminal block's ratings: complete information in the accessories catalogue pages.

### Ground screw clamp terminal blocks

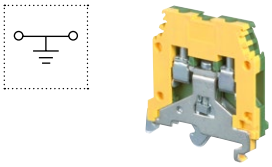

| Description | | Color | Type | Part Number | Pkg qty | Weight (1 pce) g |
|---|---|---|---|---|---|---|
| Ground | Profile aligned with MA2.5/5... | Green-yellow | MA2.5/5.P | 1SNA165488R2700 | 50 | 18.00 |

Technical data valid for copper conductors only.

**2.5 mm²**
12 AWG

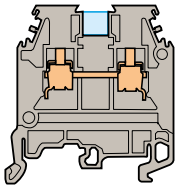

**5 mm** 0.197 in spacing

1
2

## With partition

### Ordering details

| Description | | Color | Type | Part Number | | Pkg qty | Weight (1 pce) g |
|---|---|---|---|---|---|---|---|
| **Feed-through** | With partition | Grey | MA2.5/5.1 | 1SNA115485R0200 | | 50 | 6.61 |
| | | Blue | MA2.5/5.1 | 1SNA125485R0400 | | 50 | 6.61 |

| Main technical data | IEC | UL | CSA | Nota |
|---|---|---|---|---|
| **Rated voltage** | 1000 V | 600 V | 600 V | |
| **Impulse withstand voltage** | 8000 V | | | |
| **Protection** | IP20 | NEMA 1 | | |

CE | RoHS | USR CNR | cCSAus | Gost R

### Accessories

| | Description | | Color | Type | Part Number | | Pkg qty | Weight (1 pce) g |
|---|---|---|---|---|---|---|---|---|
| 1 | **Test sockets** | DIA 2 mm 0.079 in | | AL2 | 1SNA163046R2400 | | 50 | 0.90 |
| 2 | **Test plugs** | DIA 2 mm 0.079 in | Black | FC2 | 1SNA007865R2600 | | 100 | |

Technical data valid for copper conductors only.



1SNC161096S0201 - Rev. A

# M4/6 screw clamp terminal blocks
## Feed-through - 6 mm 0.236 in spacing

**4 mm²**
10 AWG

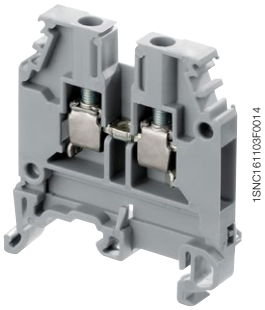


M4/6

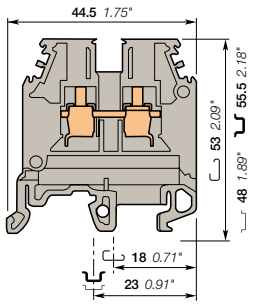


**6 mm** 0.236 in spacing

### Description

- Flexibility: snap onto symmetrical and asymmetrical rails,
- Many colors are available in addition to our generic grey, to help you quickly identify any of specific functions.

### Ordering details

| Description | Color | Type | Part Number | Pkg qty | Weight (1 pce) g |
|---|---|---|---|---|---|
| Feed-through | Grey | M4/6 | 1SNA115116R0700 | 50 | 8.20 |
| | Blue | M4/6.N | 1SNA125116R0100 | 50 | 8.20 |
| | Orange | M4/6 | 1SNA105002R2000 | 50 | 8.20 |
| | Yellow | M4/6 | 1SNA105116R1600 | 50 | 8.20 |
| | Green | M4/6 | 1SNA105001R2700 | 50 | 8.20 |
| | Red | M4/6 | 1SNA105032R1500 | 50 | 8.20 |
| | Purple | M4/6 | 1SNA206404R0500 | 50 | 8.20 |
| | Brown | M4/6 | 1SNA105209R1400 | 50 | 8.20 |
| | White | M4/6 | 1SNA105051R2000 | 50 | 8.20 |
| | Black | M4/6 | 1SNA105031R1400 | 50 | 8.20 |
| | Beige | M4/6 | 1SNA195116R0000 | 50 | 8.20 |

### Main technical data

| Connecting capacity | | IEC | UL | CSA |
|---|---|---|---|---|
| 1 conductor per clamp | Rigid - Solid / Stranded | 0.2-4 mm² | 22-10 AWG | 24-10 AWG |
| | Flexible | 0.22-4 mm² | | |
| | with insulated ferrule | | | |
| | Gauge | A4 | | |
| Rated current / Rated cross section | | 32 A / 4 mm² | 30 A / 10 AWG | 30 A / 10 AWG |
| Rated short-time withstand current (1s) | | 480 A | | |
| Rated voltage | | 1000 V | 600 V | 600 V |
| Impulse withstand voltage | | 8000 V | | |
| Protection | | IP20 | NEMA 1 | |

### Mounting instructions

| | |
|---|---|
| Rail | G32, TH 35-7.5, TH 35-15 |
| Wire stripping length | 9.5 mm<br>0.37 in |
| Tool | Flat screwdriver<br>Ø 4 mm<br>Ø 0.157 in |
| Torque | 0.5 - 0.8 N.m<br>4.4 - 7.1 lb.in |

The connecting capacity data for one Rigid - Solid / Stranded - Flexible conductor (when applicable) is a mandatory information required by IEC, UL and CSA standards.
All other data are provided as supplementary information only. For more details, please consult our CB, UL or CSA certificates and technical datasheet available on http://www.te.com

CE RoHS USR CSA Gost R

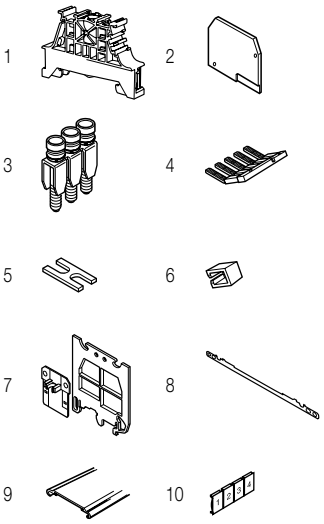


### Accessories

| | Description | | | Color | Type | Part Number | Pkg qty | Weight (1 pce) g |
|---|---|---|---|---|---|---|---|---|
| 1 | End stops | 10 mm | 0.394 in | Grey | BAM4 | 1SNK900001R0000 | 50 | 12.00 |
| | | 9 mm | 0.354 in | | BAZ1 | 1SNK900002R0000 | 50 | 4.70 |
| 2 | End sections | 2.8 mm | 0.110 in | Grey | FEM6 | 1SNA118368R1600 | 20 | 2.40 |
| 3 | Jumper bars | 2 poles | 32 A | | BJMI6-2 | 1SNA176663R0000 | 10 | 4.40 |
| | | 3 poles | | | BJMI6-3 | 1SNA176664R0100 | 10 | 6.70 |
| | | 4 poles | | | BJMI6-4 | 1SNA176665R0200 | 10 | 8.90 |
| | | 5 poles | | | BJMI6-5 | 1SNA176666R0300 | 10 | 11.20 |
| | | 10 poles | | | BJMI6-10 | 1SNA176667R0400 | 10 | 22.40 |
| 4 | Lateral jumper bars | 2 poles | 35 A | Grey | PC6-2 | 1SNA113546R1400 | 10 | 2.00 |
| | | 10 poles | | | PC6-10 | 1SNA113548R2600 | 10 | 8.00 |
| 5 | Cross spacing jumpers | 5 mm 0.200 in - 6 mm 0.236 in - 8 mm 0.315 in | | | EL6 | 1SNA173627R2100 | 10 | 0.10 |
| | | Universal screw jumper bar kit N°I | | | BJDP1 | 1SNA179623R0300 | 10 | 7.00 |
| | | Universal screw jumper bar kit N°III | | | BJDP3 | 1SNA179625R0500 | 10 | 5.00 |
| 6 | Insulating tips | For lateral jumper bars type PC... | | | EIP | 1SNA113550R2400 | 10 | |
| 7 | Circuit separators | 0 mm | 0 in | Grey | SCM6 | 1SNA113003R1000 | 10 | 0.30 |
| | | 3 mm | 0.118 in | | SCF6 | 1SNA118707R0300 | 20 | |
| 8 | Shield connectors | | | | CBM5 | 1SNA178745R1400 | 50 | |
| 9 | Protecting covers | Length 500 mm 19.70 in | | Transparent | CPM | 1SNA187312R1400 | 1 | |
| 10 | Terminal block markers | Blank card | | White | RC610 | 1SNA233000R0100 | 1 | 7.50 |

Complete list of accessories is indicated in the terminal block datasheet.
Some accessories such as jumper bars may modify the terminal block's ratings: complete information in the accessories catalogue pages.

### Ground screw clamp terminal blocks

| Description | | Color | Type | Part Number | Pkg qty | Weight (1 pce) g |
|---|---|---|---|---|---|---|
| Ground | Profile aligned with M4/6... | Green-yellow | M4/6.P | 1SNA165113R1600 | 50 | 21.00 |

Technical data valid for copper conductors only.

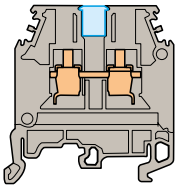

**6 mm** 0.236 in spacing

1 2

## With partition

### Ordering details

| Description | | Color | Type | Part Number | | Pkg qty | Weight (1 pce) g |
|---|---|---|---|---|---|---|---|
| Feed-through | With partition | Grey | M4/6.1 | 1SNA115259R0600 | | 50 | 8.20 |
| | | Orange | M4/6.1 | 1SNA105208R1300 | | 50 | 8.20 |

| Main technical data | IEC | UL | CSA | Nota |
|---|---|---|---|---|
| Rated voltage | 1000 V | 600 V | 600 V | |
| Impulse withstand voltage | 8000 V | | | |
| Protection | IP20 | NEMA 1 | | |

CE RoHS USR CSA Gost R

### Accessories

| | Description | | Color | Type | Part Number | | Pkg qty | Weight (1 pce) g |
|---|---|---|---|---|---|---|---|---|
| 1 | Test sockets | DIA 2 mm 0.079 in | | AL2 | 1SNA163043R2100 | | 50 | 0.90 |
| | | DIA 3 mm 0.120 in | | AL3 | 1SNA163261R0000 | | 50 | 1.20 |
| | | DIA 4 mm 0.157 in | | AL4-M3 | 1SNA206721R0100 | | 50 | 1.10 |
| 2 | Test plugs | DIA 2 mm 0.079 in | Black | FC2 | 1SNA007865R2600 | | 100 | |

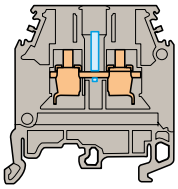

**6 mm** 0.236 in spacing

1

## With test socket DIA 2 mm 0.079 in

### Ordering details

| Description | | Color | Type | Part Number | | Pkg qty | Weight (1 pce) g |
|---|---|---|---|---|---|---|---|
| Feed-through | With test socket DIA 2 mm 0.079 in | Grey | M4/6.2 | 1SNA115217R1400 | | 50 | 8.20 |

| Main technical data | IEC | UL | CSA | Nota |
|---|---|---|---|---|
| Rated voltage | 800 V | 600 V | 600 V | |
| Impulse withstand voltage | 8000 V | | | |
| Protection | IP20 | NEMA 1 | | |

CE RoHS USR CSA Gost R

### Accessories

| | Description | | Color | Type | Part Number | | Pkg qty | Weight (1 pce) g |
|---|---|---|---|---|---|---|---|---|
| 1 | Test plugs | DIA 2 mm 0.079 in | Black | FC2 | 1SNA007865R2600 | | 100 | |

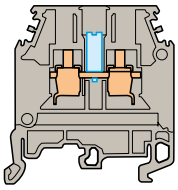

**6 mm** 0.236 in spacing

1

## With test socket DIA 4 mm 0.157 in

### Ordering details

| Description | | Color | Type | Part Number | | Pkg qty | Weight (1 pce) g |
|---|---|---|---|---|---|---|---|
| Feed-through | With test socket DIA 4 mm 0.157 in | Grey | M4/6.4 | 1SNA115192R0400 | | 50 | 8.20 |
| | | Beige | M4/6.4 | 1SNA195192R0500 | | 50 | 8.20 |

| Main technical data | IEC | UL | CSA | Nota |
|---|---|---|---|---|
| Rated voltage | 800 V | 600 V | 600 V | |
| Impulse withstand voltage | 8000 V | | | |
| Protection | IP20 | NEMA 1 | | |

CE RoHS USR CSA Gost R

### Accessories

| | Description | | Color | Type | Part Number | | Pkg qty | Weight (1 pce) g |
|---|---|---|---|---|---|---|---|---|
| 1 | Test plugs | DIA 4 mm 0.157 in | White | FC4 | 1SNA167860R0100 | | 10 | |

Technical data valid for copper conductors only.

1SNC161093S0201 - Rev. A

# M4/6.3A screw clamp terminal blocks
## Feed-through - 6 mm 0.236 in spacing

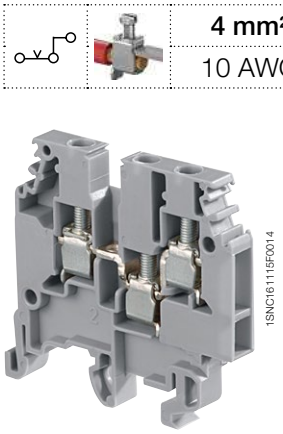


M4/6.3A

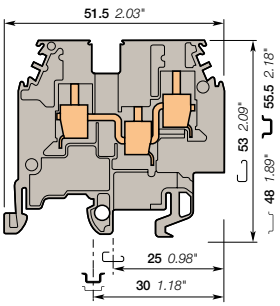


**6 mm** 0.236 in spacing

| 4 mm² |
|---|
| 10 AWG |

### Description

- Ease one potential distribution on 3 independent screw clamps,
- Flexibility: snap onto symmetrical and asymmetrical rails.

### Ordering details

| Description | Color | Type | Part Number | | Pkg qty | Weight (1 pce) g |
|---|---|---|---|---|---|---|
| Feed-through | Grey | M4/6.3A | 1SNA115468R2000 | | 50 | 11.00 |
| | Blue | M4/6.3A.N | 1SNA125468R2200 | | 50 | 11.00 |

### Main technical data

| Connecting capacity | | IEC | UL | CSA |
|---|---|---|---|---|
| 1 conductor per clamp | Rigid - Solid / Stranded | 0.2-4 mm² | 22-10 AWG | 12 AWG |
| | Flexible | 0.22-4 mm² | | |
| | with insulated ferrule | | | |
| | Gauge | A4 | | |
| Rated current / Rated cross section | | 32 A / 4 mm² | 20 A / 10 AWG | 25 A / 12 AWG |
| Rated short-time withstand current (1s) | | 480 A | | |
| Rated voltage | | 800 V | 600 V | 600 V |
| Impulse withstand voltage | | 8000 V | | |
| Protection | | IP20 | NEMA 1 | |

### Mounting instructions

| | |
|---|---|
| Rail | G32, TH 35-7.5, TH 35-15 |
| Wire stripping length | 9.5 mm 0.37 in |
| Tool | Flat screwdriver Ø 4 mm Ø 0.157 in |
| Torque | 0.5 - 0.8 N.m 4.4 - 7.1 lb.in |

The connecting capacity data for one Rigid - Solid / Stranded - Flexible conductor (when applicable) is a mandatory information required by IEC, UL and CSA standards.
All other data are provided as supplementary information only. For more details, please consult our CB, UL or CSA certificates and technical datasheet available on http://www.te.com

CE RoHS USR CSA Gost R

### Accessories

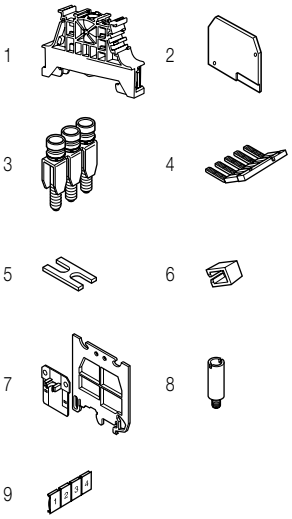


| | Description | | | Color | Type | Part Number | | Pkg qty | Weight (1 pce) g |
|---|---|---|---|---|---|---|---|---|---|
| 1 | End stops | 10 mm | 0.394 in | Grey | BAM4 | 1SNK900001R0000 | | 50 | 12.00 |
| | | 9 mm | 0.354 in | | BAZ1 | 1SNK900002R0000 | | 50 | 4.70 |
| 2 | End sections | 3 mm | 0.118 in | Grey | FEM3A | 1SNA116576R1500 | | 20 | 3.30 |
| 3 | Jumper bars | 2 poles | 32 A | | BJMI6-2 | 1SNA176663R0000 | | 10 | 4.40 |
| | | 3 poles | | | BJMI6-3 | 1SNA176664R0100 | | 10 | 6.70 |
| | | 4 poles | | | BJMI6-4 | 1SNA176665R0200 | | 10 | 8.90 |
| | | 5 poles | | | BJMI6-5 | 1SNA176666R0300 | | 10 | 11.20 |
| | | 10 poles | | | BJMI6-10 | 1SNA176667R0400 | | 10 | 22.40 |
| 4 | Lateral jumper bars | 2 poles | 35 A | Grey | PC6-2 | 1SNA113546R1400 | | 10 | 2.00 |
| | | 10 poles | | | PC6-10 | 1SNA113548R2600 | | 10 | 8.00 |
| 5 | Cross spacing jumpers | 5 mm 0.200 in - 6 mm 0.236 in - 8 mm 0.315 in | | | EL6 | 1SNA173627R2100 | | 10 | 0.10 |
| | | Universal screw jumper bar kit N°I | | | BJDP1 | 1SNA179623R0300 | | 10 | 7.00 |
| | | Universal screw jumper bar kit N°III | | | BJDP3 | 1SNA179625R0500 | | 10 | 5.00 |
| 6 | Insulating tips | For lateral jumper bars type PC... | | | EIP | 1SNA113550R2400 | | 10 | |
| 7 | Circuit separators | 0 mm | 0 in | Grey | SCM6 | 1SNA113003R1000 | | 10 | 0.30 |
| 8 | Test sockets | DIA 2 mm 0.079 in | | | AL2 | 1SNA163043R2100 | | 50 | 0.90 |
| | | DIA 3 mm 0.120 in | | | AL3 | 1SNA163261R0000 | | 50 | 1.20 |
| 9 | Terminal block markers | Blank card | | White | RC610 | 1SNA233000R0100 | | 1 | 7.50 |

Complete list of accessories is indicated in the terminal block datasheet.
Some accessories such as jumper bars may modify the terminal block's ratings: complete information in the accessories catalogue pages.

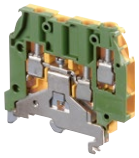

### Ground screw clamp terminal blocks

| Description | | Color | Type | Part Number | | Pkg qty | Weight (1 pce) g |
|---|---|---|---|---|---|---|---|
| Ground | Profile aligned with M4/6.3A.P... | Green-yellow | M4/6.3A.P | 1SNA195637R1200 | | 50 | 22.00 |

Technical data valid for copper conductors only.

# M4/6.4A screw clamp terminal blocks
## Feed-through - 6 mm 0.236 in spacing

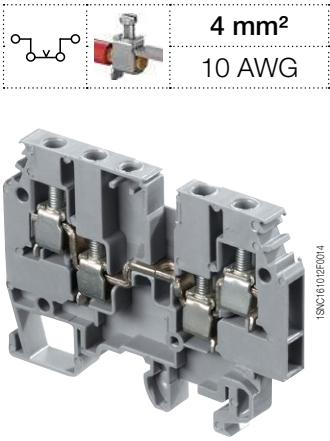


M4/6.4A

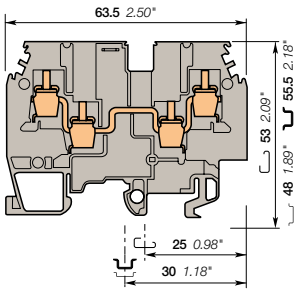


**6 mm** 0.236 in spacing

| 4 mm² |
|---|
| 10 AWG |

### Description

- Ease one potential distribution on 4 independent screw clamps,
- Flexibility: snap onto symmetrical and asymmetrical rails.

### Ordering details

| Description | Color | Type | Part Number | | Pkg qty | Weight (1 pce) g |
|---|---|---|---|---|---|---|
| Feed-through | Grey | M4/6.4A | 1SNA115479R2300 | | 50 | 20.00 |
| | Blue | M4/6.4A.N | 1SNA125479R2500 | | 50 | 20.00 |

### Main technical data

| Connecting capacity | | IEC | UL | CSA |
|---|---|---|---|---|
| 1 conductor per clamp | Rigid - Solid / Stranded | 0.2-4 mm² | 22-10 AWG | 12 AWG |
| | Flexible | 0.22-4 mm² | | |
| | with insulated ferrule | | | |
| | Gauge | A4 | | |
| Rated current / Rated cross section | | 32 A / 4 mm² | 20 A / 10 AWG | 25 A / 12 AWG |
| Rated short-time withstand current (1s) | | 480 A | | |
| Rated voltage | | 800 V | 600 V | 600 V |
| Impulse withstand voltage | | 8000 V | | |
| Protection | | IP20 | NEMA 1 | |

### Mounting instructions

| | |
|---|---|
| Rail | G32, TH 35-7.5, TH 35-15 |
| Wire stripping length | 9.5 mm 0.37 in |
| Tool | Flat screwdriver Ø 4 mm Ø 0.157 in |
| Torque | 0.5 - 0.8 N.m 4.4 - 7.1 lb.in |

The connecting capacity data for one Rigid - Solid / Stranded - Flexible conductor (when applicable) is a mandatory information required by IEC, UL and CSA standards.
All other data are provided as supplementary information only. For more details, please consult our CB, UL or CSA certificates and technical datasheet available on http://www.te.com

CE RoHS USR CSA Gost R

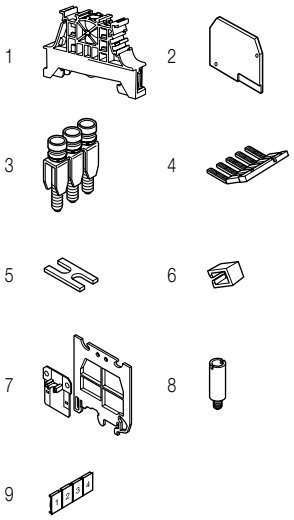


### Accessories

| | Description | | | Color | Type | Part Number | | Pkg qty | Weight (1 pce) g |
|---|---|---|---|---|---|---|---|---|---|
| 1 | End stops | 10 mm | 0.394 in | Grey | BAM4 | 1SNK900001R0000 | | 50 | 12.00 |
| | | 9 mm | 0.354 in | | BAZ1 | 1SNK900002R0000 | | 50 | 4.70 |
| 2 | End sections | 3 mm | 0.118 in | Grey | FEM4A | 1SNA116629R2200 | | 20 | 3.80 |
| 3 | Jumper bars | 2 poles | 32 A | | BJMI6-2 | 1SNA176663R0000 | | 10 | 4.40 |
| | | 3 poles | | | BJMI6-3 | 1SNA176664R0100 | | 10 | 6.70 |
| | | 4 poles | | | BJMI6-4 | 1SNA176665R0200 | | 10 | 8.90 |
| | | 5 poles | | | BJMI6-5 | 1SNA176666R0300 | | 10 | 11.20 |
| | | 10 poles | | | BJMI6-10 | 1SNA176667R0400 | | 10 | 22.40 |
| 4 | Lateral jumper bars | 2 poles | 35 A | Grey | PC6-2 | 1SNA113546R1400 | | 10 | 2.00 |
| | | 10 poles | | | PC6-10 | 1SNA113548R2600 | | 10 | 8.00 |
| 5 | Cross spacing jumpers | 5 mm 0.200 in - 6 mm 0.236 in - 8 mm 0.315 in | | | EL6 | 1SNA173627R2100 | | 10 | 0.10 |
| | | Universal screw jumper bar kit N°I | | | BJDP1 | 1SNA179623R0300 | | 10 | 7.00 |
| | | Universal screw jumper bar kit N°III | | | BJDP3 | 1SNA179625R0500 | | 10 | 5.00 |
| 6 | Insulating tips | For lateral jumper bars type PC... | | | EIP | 1SNA113550R2400 | | 10 | |
| 7 | Circuit separators | 0 mm | | Grey | SCM6 | 1SNA113003R1000 | | 10 | 0.30 |
| 8 | Test sockets | DIA 2 mm 0.079 in | | | AL2 | 1SNA163043R2100 | | 50 | 0.90 |
| | | DIA 3 mm 0.120 in | | | AL3 | 1SNA163261R0000 | | 50 | 1.20 |
| 9 | Terminal block markers | Blank card | | White | RC610 | 1SNA233000R0100 | | 1 | 7.50 |

Complete list of accessories is indicated in the terminal block datasheet.
Some accessories such as jumper bars may modify the terminal block's ratings: complete information in the accessories catalogue pages.

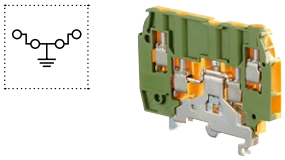

### Ground screw clamp terminal blocks

| Description | | Color | Type | Part Number | | Pkg qty | Weight (1 pce) g |
|---|---|---|---|---|---|---|---|
| Ground | Profile aligned with M4/6.4A.P... | Green-yellow | M4/6.4A.P | 1SNA195638R2300 | | 50 | 22.00 |

Technical data valid for copper conductors only.



1SNC161119S0201 - Rev. B

# M6/8 screw clamp terminal blocks
## Feed-through - 8 mm 0.315 in spacing

**6 mm²**
8 AWG

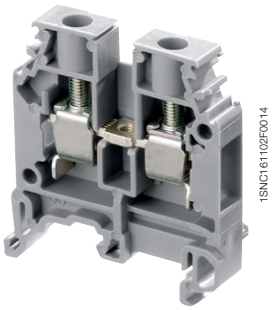


M6/8

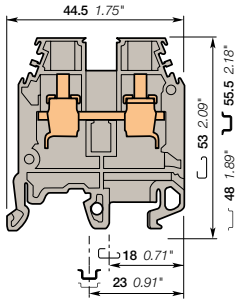


**8 mm** 0.315 in spacing

### Description

- Flexibility: snap onto symmetrical and asymmetrical rails,
- Many colors are available in addition to our generic grey, to help you quickly identify any of specific functions.

### Ordering details

| Description | Color | Type | Part Number | Pkg qty | Weight (1 pce) g |
|---|---|---|---|---|---|
| Feed-through | Grey | M6/8 | 1SNA115118R1100 | 50 | 12.80 |
| | Blue | M6/8.N | 1SNA125118R1300 | 50 | 12.80 |
| | Orange | M6/8 | 1SNA105004R2200 | 50 | 12.80 |
| | Yellow | M6/8 | 1SNA105118R2000 | 50 | 12.80 |
| | Red | M6/8 | 1SNA400186R2100 | 50 | 12.80 |
| | White | M6/8 | 1SNA400187R2200 | 50 | 12.80 |
| | Black | M6/8 | 1SNA400239R1500 | 50 | 12.80 |
| | Beige | M6/8 | 1SNA195118R1200 | 50 | 12.80 |

### Main technical data

| Connecting capacity | | IEC | UL | CSA |
|---|---|---|---|---|
| 1 conductor per clamp | Rigid - Solid / Stranded | 0.5-10 mm² | 22-8 AWG | 24-8 AWG |
| | Flexible | 0.5-6 mm² | | |
| | with insulated ferrule | | | |
| | Gauge | A5 | | |
| Rated current / Rated cross section | | 41 A / 6 mm² | 50 A / 8 AWG | 50 A / 8 AWG |
| Rated short-time withstand current (1s) | | 720 A | | |
| Rated voltage | | 1000 V | 600 V | 600 V |
| Impulse withstand voltage | | 8000 V | | |
| Protection | | IP20 | NEMA 1 | |

### Mounting instructions

| | |
|---|---|
| Rail | G32, TH 35-7.5, TH 35-15 |
| Wire stripping length | 12 mm<br>0.47 in |
| Tool | Flat screwdriver<br>Ø 4 - 5 mm<br>Ø 0.157 - 0.197 in |
| Torque | 0.8 - 1 N.m<br>7.1 - 8.9 lb.in |

The connecting capacity data for one Rigid - Solid / Stranded - Flexible conductor (when applicable) is a mandatory information required by IEC, UL and CSA standards.
All other data are provided as supplementary information only. For more details, please consult our CB, UL or CSA certificates and technical datasheet available on http://www.te.com

CE RoHS USR CSA Gost R

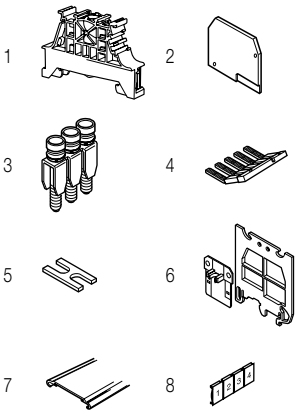


### Accessories

| | Description | | | Color | Type | Part Number | Pkg qty | Weight (1 pce) g |
|---|---|---|---|---|---|---|---|---|
| 1 | End stops | 10 mm | 0.394 in | Grey | BAM4 | 1SNK900001R0000 | 50 | 12.00 |
| | | 9 mm | 0.354 in | | BAZ1 | 1SNK900002R0000 | 50 | 4.70 |
| 2 | End sections | 2.8 mm | 0.110 in | Grey | FEM6 | 1SNA118368R1600 | 20 | 2.40 |
| 3 | Jumper bars | 2 poles | 41 A | | BJMI8-2 | 1SNA176669R1600 | 10 | 4.50 |
| | | 3 poles | | | BJMI8-3 | 1SNA176670R1300 | 10 | 6.00 |
| | | 4 poles | | | BJMI8-4 | 1SNA176671R0000 | 10 | 10.00 |
| | | 5 poles | | | BJMI8-5 | 1SNA176672R0100 | 10 | 12.22 |
| | | 10 poles | | | BJMI8-10 | 1SNA176673R0200 | 10 | 20.00 |
| 4 | Lateral jumper bars | 2 poles | 50 A | | PC8-2 | 1SNA116538R1700 | 10 | 3.00 |
| | | 10 poles | | | PC8-10 | 1SNA163313R2400 | 10 | |
| 5 | Cross spacing jumpers | 5 mm 0.200 in - 6 mm 0.236 in - 8 mm 0.315 in | | | EL6 | 1SNA173627R2100 | 10 | 0.10 |
| | | Universal screw jumper bar kit N°I | | | BJDP1 | 1SNA179623R0300 | 10 | 7.00 |
| | | Universal screw jumper bar kit N°III | | | BJDP3 | 1SNA179625R0500 | 10 | 5.00 |
| 6 | Circuit separators | 0 mm | 0 in | Grey | SCM6 | 1SNA113003R1000 | 10 | 0.30 |
| | | 3 mm | 0.118 in | | SCFM6 | 1SNA114825R0500 | 20 | 4.00 |
| | | | | | SCFCV1-2 | 1SNA116795R1100 | 10 | 8.00 |
| | | | | | SCF6 | 1SNA118707R0300 | 20 | |
| 7 | Protecting covers | Length 1 m 39 in | | Transparent | CPV1-2 | 1SNA176816R1200 | 1 | |
| | | Length 500 mm 19.70 in | | | CPM | 1SNA187312R1400 | 1 | |
| 8 | Terminal block markers | Blank card | | White | RC810 | 1SNA234000R0200 | 1 | 8.20 |

Complete list of accessories is indicated in the terminal block datasheet.
Some accessories such as jumper bars may modify the terminal block's ratings: complete information in the accessories catalogue pages.

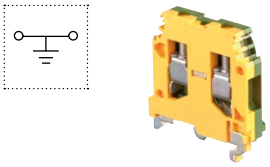

### Ground screw clamp terminal blocks

| Description | | Color | Type | Part Number | Pkg qty | Weight (1 pce) g |
|---|---|---|---|---|---|---|
| Ground | Profile aligned with M6/8... | Green-yellow | M6/8.P | 1SNA165114R1700 | 50 | 26.00 |

Technical data valid for copper conductors only.

6 mm²
8 AWG

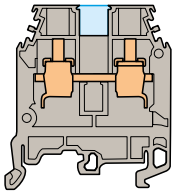

**8 mm** 0.315 in spacing

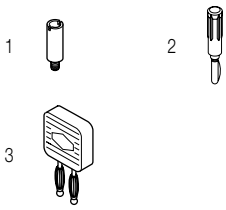


## With partition

### Ordering details

| Description | | Color | Type | Part Number | Pkg qty | Weight (1 pce) g |
|---|---|---|---|---|---|---|
| Feed-through | With partition | Grey | M6/8.1 | 1SNA115260R0300 | 50 | 12.80 |
| | | Green | M6/8.1 | 1SNA105128R2200 | 50 | 12.80 |
| | | Beige | M6/8.1 | 1SNA195260R0400 | 50 | 12.80 |
| | | Blue | M6/8.1.N | 1SNA125260R0500 | 50 | 12.80 |

| Main technical data | IEC | UL | CSA |
|---|---|---|---|
| Rated voltage | 1000 V | 600 V | 600 V |
| Impulse withstand voltage | 8000 V | | |
| Protection | IP20 | NEMA 1 | |

CE RoHS USR CSA Gost R

### Accessories

| | Description | | Color | Type | Part Number | Pkg qty | Weight (1 pce) g |
|---|---|---|---|---|---|---|---|
| 1 | Test sockets | DIA 2 mm 0.079 in | | AL2 | 1SNA163043R2100 | 50 | 0.90 |
| | | DIA 3 mm 0.120 in | | AL3 | 1SNA163261R0000 | 50 | 1.20 |
| | | DIA 4 mm 0.157 in | | AL4-M3 | 1SNA206721R0100 | 50 | 1.10 |
| 2 | Test plugs | DIA 2 mm 0.079 in | Black | FC2 | 1SNA007865R2600 | 100 | |
| | | DIA 4 mm 0.157 in | White | FC4 | 1SNA167860R0100 | 10 | 10.00 |
| 3 | Short circuit plugs | DIA 4 mm 0.157 in | | BP8.A4 | 1SNA173888R2000 | 10 | |

6 mm²
8 AWG

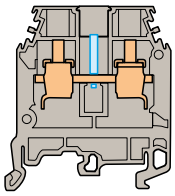

**8 mm** 0.315 in spacing

## With test socket DIA 2 mm 0.079 in

### Ordering details

| Description | | Color | Type | Part Number | Pkg qty | Weight (1 pce) g |
|---|---|---|---|---|---|---|
| Feed-through | With test socket DIA 2 mm 0.079 in | Grey | M6/8.2 | 1SNA115218R2500 | 50 | 12.80 |

| Main technical data | IEC | UL | CSA |
|---|---|---|---|
| Rated voltage | 800 V | 600 V | 600 V |
| Impulse withstand voltage | 8000 V | | |
| Protection | IP20 | NEMA 1 | |

CE RoHS USR CSA Gost R

### Accessories

| | Description | | Color | Type | Part Number | Pkg qty | Weight (1 pce) g |
|---|---|---|---|---|---|---|---|
| 1 | Test plugs | DIA 2 mm 0.079 in | Black | FC2 | 1SNA007865R2600 | 100 | |

6 mm²
8 AWG

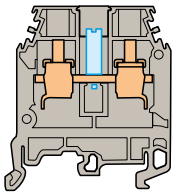

**8 mm** 0.315 in spacing

## With test socket DIA 4 mm 0.157 in

### Ordering details

| Description | | Color | Type | Part Number | Pkg qty | Weight (1 pce) g |
|---|---|---|---|---|---|---|
| Feed-through | With test socket DIA 4 mm 0.157 in | Grey | M6/8.4 | 1SNA115219R2600 | 50 | 12.80 |

| Main technical data | IEC | UL | CSA |
|---|---|---|---|
| Rated voltage | 800 V | 600 V | 600 V |
| Impulse withstand voltage | 8000 V | | |
| Protection | IP10 | NEMA | |

CE RoHS USR CSA Gost R

### Accessories

| | Description | | Color | Type | Part Number | Pkg qty | Weight (1 pce) g |
|---|---|---|---|---|---|---|---|
| 1 | Test plugs | DIA 4 mm 0.157 in | White | FC4 | 1SNA167860R0100 | 10 | 10.00 |
| 2 | Short circuit plugs | DIA 4 mm 0.157 in | | BP8.A4 | 1SNA173888R2000 | 10 | |

Technical data valid for copper conductors only.



1SNC161097S0201 - Rev. A

# M10/10 screw clamp terminal blocks
## Feed-through - 10 mm 0.394 in spacing

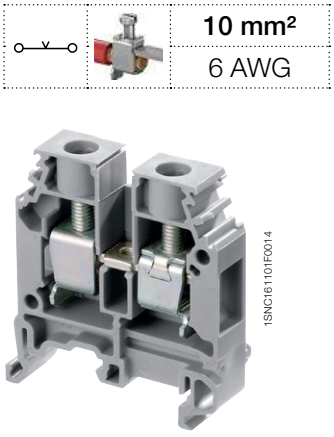

| | |
|---|---|
| 10 mm² | |
| 6 AWG | |




M10/10

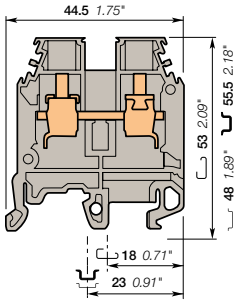


**10 mm** 0.394 in spacing

### Description

- Flexibility: snap onto symmetrical and asymmetrical rails,
- Many colors are available in addition to our generic grey, to help you quickly identify any of specific functions.

### Ordering details

| Description | Color | Type | Part Number | Pkg qty | Weight (1 pce) g |
|---|---|---|---|---|---|
| Feed-through | Grey | M10/10 | 1SNA115120R1700 | 50 | 17.20 |
| | Blue | M10/10.N | 1SNA125120R1100 | 50 | 17.20 |
| | Yellow | M10/10 | 1SNA105120R2600 | 50 | 17.20 |
| | Red | M10/10 | 1SNA400189R0400 | 50 | 17.20 |
| | White | M10/10 | 1SNA400190R0100 | 50 | 17.20 |
| | Black | M10/10 | 1SNA400188R0300 | 50 | 17.20 |
| | Beige | M10/10 | 1SNA195120R1000 | 50 | 17.20 |

### Main technical data

| Connecting capacity | | IEC | UL | CSA |
|---|---|---|---|---|
| 1 conductor per clamp | Rigid - Solid / Stranded | 0.5-16 mm² | 20-6 AWG | 22-6 AWG |
| | Flexible | 0.5-10 mm² | | |
| | with insulated ferrule | | | |
| | Gauge | B6 | | |
| Rated current / Rated cross section | | 57 A / 10 mm² | 65 A / 6 AWG | 70 A / 6 AWG |
| Rated short-time withstand current (1s) | | 1200 A | | |
| Rated voltage | | 1000 V | 600 V | 600 V |
| Impulse withstand voltage | | 8000 V | | |
| Protection | | IP20 | NEMA 1 | |

### Mounting instructions

| | |
|---|---|
| Rail | G32, TH 35-7.5, TH 35-15 |
| Wire stripping length | 12 mm 0.47 in |
| Tool | Flat screwdriver Ø 5.5 - 6 mm Ø 0.217 - 0.236 in |
| Torque | 1.2 - 1.4 N.m 10.6 - 12.4 lb.in |

The connecting capacity data for one Rigid - Solid / Stranded - Flexible conductor (when applicable) is a mandatory information required by IEC, UL and CSA standards.
All other data are provided as supplementary information only. For more details, please consult our CB, UL or CSA certificates and technical datasheet available on http://www.te.com

CE RoHS USR CSA Gost R

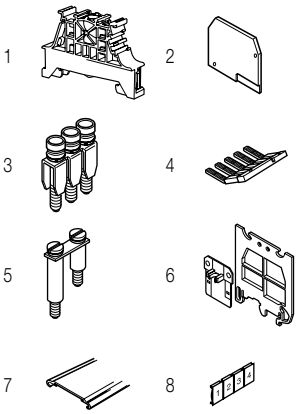


### Accessories

| | Description | | | Color | Type | Part Number | Pkg qty | Weight (1 pce) g |
|---|---|---|---|---|---|---|---|---|
| 1 | End stops | 10 mm | 0.394 in | Grey | BAM4 | 1SNK900001R0000 | 50 | 12.00 |
| | | 9 mm | 0.354 in | | BAZ1 | 1SNK900002R0000 | 50 | 4.70 |
| 2 | End sections | 2.8 mm | 0.110 in | Grey | FEM6 | 1SNA118368R1600 | 20 | 2.40 |
| 3 | Jumper bars | 2 poles | 57 A | | BJMI10-2 | 1SNA176675R0400 | 50 | 5.00 |
| | | 3 poles | | | BJMI10-3 | 1SNA176676R0500 | 10 | 8.00 |
| | | 4 poles | | | BJMI10-4 | 1SNA176677R0600 | 10 | 11.00 |
| | | 5 poles | | | BJMI10-5 | 1SNA176678R1700 | 10 | 13.00 |
| | | 10 poles | | | BJMI10-10 | 1SNA176679R1000 | 10 | 27.00 |
| 4 | Lateral jumper bars | 10 poles | 70 A | | PC10-10 | 1SNA163315R2600 | 10 | |
| 5 | Cross spacing jumpers | Universal screw jumper bar kit N°I | | | BJDP1 | 1SNA179623R0300 | 10 | 7.00 |
| | | Universal screw jumper bar kit N°III | | | BJDP3 | 1SNA179625R0500 | 10 | 5.00 |
| 6 | Circuit separators | 0 mm | 0 in | Grey | SCM6 | 1SNA113003R1000 | 10 | 0.30 |
| | | 3 mm | 0.118 in | | SCFM6 | 1SNA114825R0500 | 20 | 4.00 |
| | | | | | SCFCV1-2 | 1SNA116795R1100 | 10 | 8.00 |
| | | | | | SCF6 | 1SNA118707R0300 | 20 | |
| 7 | Protecting covers | Length 1 m 39 in | | Transparent | CPV1-2 | 1SNA176816R1200 | 1 | |
| | | Length 500 mm 19.70 in | | | CPM | 1SNA187312R1400 | 1 | |
| 8 | Terminal block markers | Blank card | | White | RC1010 | 1SNA238000R1600 | 1 | 1.30 |

Complete list of accessories is indicated in the terminal block datasheet.
Some accessories such as jumper bars may modify the terminal block's ratings: complete information in the accessories catalogue pages.

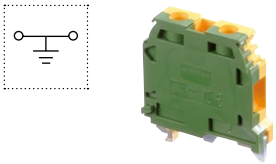

### Ground screw clamp terminal blocks

| Description | | Color | Type | Part Number | Pkg qty | Weight (1 pce) g |
|---|---|---|---|---|---|---|
| Ground | Profile aligned with M10/10... | Green-yellow | M10/10.P | 1SNA165115R1000 | 50 | 29.00 |

Technical data valid for copper conductors only.

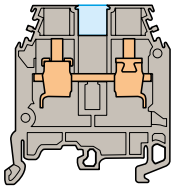

**10 mm** 0.394 in spacing

1

2

# With partition

## Ordering details

| Description | | Color | Type | Part Number | | Pkg qty | Weight (1 pce) g |
|---|---|---|---|---|---|---|---|
| **Feed-through** | With partition | Grey | M10/10.1 | 1SNA115261R2000 | | 50 | 17.20 |

| Main technical data | IEC | UL | CSA | Nota |
|---|---|---|---|---|
| Rated voltage | 1000 V | 600 V | 600 V | |
| Impulse withstand voltage | 8000 V | | | |
| Protection | IP20 | NEMA 1 | | |

CE RoHS USR CSA Gost R

## Accessories

| | Description | | Color | Type | Part Number | | Pkg qty | Weight (1 pce) g |
|---|---|---|---|---|---|---|---|---|
| 1 | **Test sockets** | DIA 2 mm 0.079 in | | AL2 | 1SNA163043R2100 | | 50 | 0.90 |
| | | DIA 3 mm 0.120 in | | AL3 | 1SNA163261R0000 | | 50 | 1.20 |
| | | DIA 4 mm 0.157 in | | AL4-M3 | 1SNA206721R0100 | | 50 | 1.10 |
| 2 | **Test plugs** | DIA 2 mm 0.079 in | Black | FC2 | 1SNA007865R2600 | | 100 | |
| | | DIA 4 mm 0.157 in | White | FC4 | 1SNA167860R0100 | | 10 | |

Technical data valid for copper conductors only.



1SNC161098S0201 - Rev. A

# M16/12 screw clamp terminal blocks
## Feed-through - 12 mm 0.472 in spacing

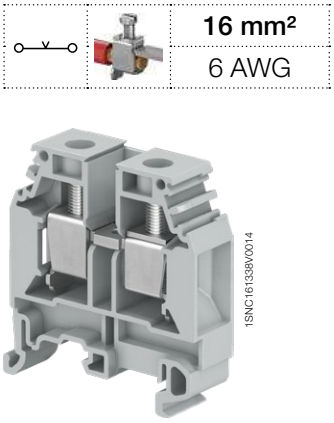


M16/12

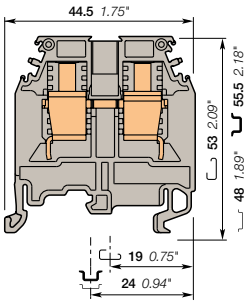


**12 mm** 0.472 in spacing

| | |
|---|---|
| | **16 mm²** |
| | 6 AWG |

### Description

- Flexibility: snap onto symmetrical and asymmetrical rails,
- Many colors are available in addition to our generic grey, to help you quickly identify any of specific functions,
- Use of jumper bars requires the user to cut out the partition.

### Ordering details

| Description | | Color | Type | Part Number | | Pkg qty | Weight (1 pce) g |
|---|---|---|---|---|---|---|---|
| **Feed-through** | With partition | Grey | M16/12 | 1SNA115129R1400 | | 20 | 26.12 |
| | | Blue | M16/12.N | 1SNA125129R1600 | | 20 | 26.12 |
| | | Yellow | M16/12 | 1SNA105129R2300 | | 20 | 26.12 |
| | | Red | M16/12 | 1SNA400192R2700 | | 20 | 26.12 |
| | | White | M16/12 | 1SNA400193R2000 | | 20 | 26.12 |
| | | Black | M16/12 | 1SNA400191R2600 | | 20 | 26.12 |
| | | Beige | M16/12 | 1SNA195129R1500 | | 20 | 26.12 |

### Main technical data

| Connecting capacity | | IEC | UL | CSA |
|---|---|---|---|---|
| **1 conductor per clamp** | Rigid - Solid / Stranded | 2.5-25 mm² | 18-4 AWG | 14-4 AWG |
| | Flexible | 2.5-16 mm² | | |
| | with insulated ferrule | | | |
| | Gauge | B7 | | |
| **Rated current / Rated cross section** | | 76 A / 16 mm² | 85 A / 4 AWG | 85 A / 4 AWG |
| **Rated short-time withstand current** (1s) | | 1920 A | | |
| **Rated voltage** | | 1000 V | 600 V | 600 V |
| **Impulse withstand voltage** | | 8000 V | | |
| **Protection** | | IP20 | NEMA 1 | |

### Mounting instructions

| | |
|---|---|
| Rail | G32, TH 35-7.5, TH 35-15 |
| Wire stripping length | 14 mm<br>0.55 in |
| Tool | Flat screwdriver<br>Ø 5.5 mm<br>Ø 0.22 in |
| Torque | 1.2 - 1.4 N.m<br>10.6 - 12.4 lb.in |

The connecting capacity data for one Rigid - Solid / Stranded - Flexible conductor (when applicable) is a mandatory information required by IEC, UL and CSA standards.
All other data are provided as supplementary information only. For more details, please consult our CB, UL or CSA certificates and technical datasheet available on http://www.te.com

CE RoHS USR CSA Gost R

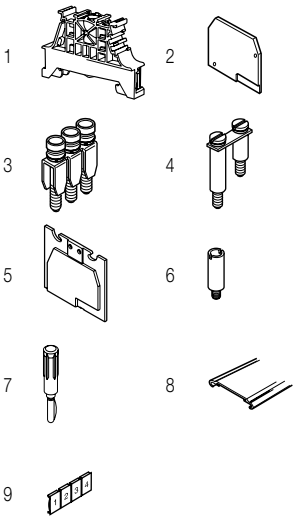


### Accessories

| | Description | | | Color | Type | Part Number | | Pkg qty | Weight (1 pce) g |
|---|---|---|---|---|---|---|---|---|---|
| 1 | **End stops** | 10 mm | 0.394 in | Grey | BAM4 | 1SNK900001R0000 | | 50 | 12.00 |
| | | 9 mm | 0.354 in | | BAZ1 | 1SNK900002R0000 | | 50 | 4.70 |
| 2 | **End sections** | 3 mm | 0.118 in | Grey | FEM12 | 1SNA118618R0100 | | 20 | 3.20 |
| 3 | **Jumper bars** | 2 poles | 76 A | | BJMI12-2 | 1SNA179626R0600 | | 10 | 6.00 |
| | | 3 poles | | | BJMI12-3 | 1SNA179628R1000 | | 10 | 9.00 |
| | | 4 poles | | | BJMI12-4 | 1SNA179629R1100 | | 10 | 13.00 |
| | | 5 poles | | | BJMI12-5 | 1SNA179630R1600 | | 10 | 16.00 |
| | | 10 poles | | | BJMI12-10 | 1SNA179631R0300 | | 10 | 33.00 |
| 4 | **Cross spacing jumpers** | Universal screw jumper bar kit N°II | | | BJDP2 | 1SNA179624R0400 | | 10 | 6.00 |
| | | Universal screw jumper bar kit N°III | | | BJDP3 | 1SNA179625R0500 | | 10 | 5.00 |
| 5 | **Circuit separators** | 3 mm | 0.118 in | Grey | SCF12 | 1SNA113102R1000 | | 20 | 2.00 |
| | | | | | SCFM6 | 1SNA114825R0500 | | 20 | 4.00 |
| | | | | | SCFCV1-2 | 1SNA116795R1100 | | 10 | 8.00 |
| 6 | **Test sockets** | DIA 2 mm 0.079 in | | | AL2 | 1SNA163043R2100 | | 50 | 0.90 |
| | | DIA 3 mm 0.120 in | | | AL3 | 1SNA163261R0000 | | 50 | 1.20 |
| | | DIA 4 mm 0.157 in | | | AL4-M3 | 1SNA206721R0100 | | 50 | 1.10 |
| 7 | **Test plugs** | DIA 2 mm 0.079 in | | Black | FC2 | 1SNA007865R2600 | | 100 | |
| | | DIA 4 mm 0.157 in | | White | FC4 | 1SNA167860R0100 | | 10 | |
| 8 | **Protecting covers** | Length 1 m 39 in | | Transparent | CPV1-2 | 1SNA176816R1200 | | 1 | |
| | | Length 500 mm 19.70 in | | | CPM | 1SNA187312R1400 | | 1 | |
| 9 | **Terminal block markers** | Blank card | | White | RC1010 | 1SNA238000R1600 | | 1 | 1.30 |

Complete list of accessories is indicated in the terminal block datasheet.
Some accessories such as jumper bars may modify the terminal block's ratings: complete information in the accessories catalogue pages.

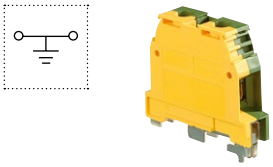

### Ground screw clamp terminal blocks

| Description | | Color | Type | Part Number | | Pkg qty | Weight (1 pce) g |
|---|---|---|---|---|---|---|---|
| **Ground** | Profile aligned with M16/12... | Green-yellow | M16/12.P | 1SNA165130R2300 | | 20 | 40.00 |

Technical data valid for copper conductors only.

# M35/16 screw clamp terminal blocks
## Feed-through - 16 mm 0.630 in spacing

35 mm²
0 AWG

M35/16

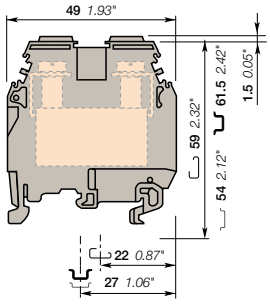


**16 mm** 0.630 in spacing

### Description

- Closed terminal block: no end section needed, optimized rigidity,
- Flexibility: snap onto symmetrical and asymmetrical rails,
- Use of jumper bars requires the user to cut out the partition.

### Ordering details

| Description | | Color | Type | Part Number | Pkg qty | Weight (1 pce) g |
|---|---|---|---|---|---|---|
| **Feed-through** | Closed block with partition | Grey | M35/16 | 1SNA115124R0700 | 20 | 50.00 |
| | | Blue | M35/16.N | 1SNA125124R0100 | 20 | 50.00 |
| | | Yellow | M35/16 | 1SNA105124R1600 | 20 | 50.00 |
| | | Red | M35/16 | 1SNA400195R2200 | 20 | 50.00 |
| | | White | M35/16 | 1SNA400196R2300 | 20 | 50.00 |
| | | Black | M35/16 | 1SNA400194R2100 | 20 | 50.00 |
| | | Beige | M35/16 | 1SNA195124R0000 | 20 | 50.00 |

### Main technical data

| Connecting capacity | | IEC | UL | CSA |
|---|---|---|---|---|
| **1 conductor per clamp** | Rigid - Solid / Stranded | 6-50 mm² | 10-0 AWG | 10-0 AWG |
| | Flexible | 6-35 mm² | | |
| | with insulated ferrule | | | |
| | Gauge | B9 | | |
| **Rated current / Rated cross section** | | 125 A / 35 mm² | 150 A / 0 AWG | 150 A / 0 AWG |
| **Rated short-time withstand current** (1s) | | 4200 A | | |
| **Rated voltage** | | 1000 V | 600 V | 600 V |
| **Impulse withstand voltage** | | 8000 V | | |
| **Protection** | | IP10 | NEMA | |

### Mounting instructions

| | |
|---|---|
| Rail | G32, TH 35-7.5, TH 35-15 |
| Wire stripping length | 17 mm<br>0.669 in |
| Tool | Flat screwdriver<br>Ø 6.5 - 7 mm<br>Ø 0.255 - 0.276 in |
| Torque | 2.8 - 3 N.m<br>24.9 - 26.7 lb.in |

The connecting capacity data for one Rigid - Solid / Stranded - Flexible conductor (when applicable) is a mandatory information required by IEC, UL and CSA standards.
All other data are provided as supplementary information only. For more details, please consult our CB, UL or CSA certificates and technical datasheet available on http://www.te.com

CE RoHS USR CNR CSA Gost R

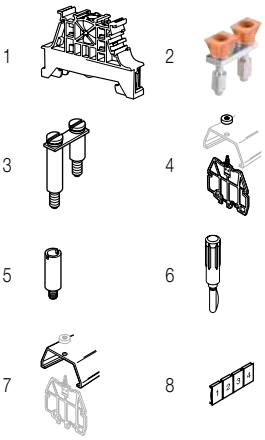


### Accessories

| | Description | | | Color | Type | Part Number | Pkg qty | Weight (1 pce) g |
|---|---|---|---|---|---|---|---|---|
| 1 | **End stops** | 10 mm | 0.394 in | Grey | BAM4 | 1SNK900001R0000 | 50 | 12.00 |
| | | 9 mm | 0.354 in | | BAZ1 | 1SNK900002R0000 | 50 | 4.70 |
| 2 | **Jumper bars** | 2 poles | 125 A | Orange | JB16-2 | 1SNK916302R0000 | 10 | 10.20 |
| | | 3 poles | | | JB16-3 | 1SNK916303R0000 | 10 | 16.00 |
| | | 4 poles | | | JB16-4 | 1SNK916304R0000 | 10 | 21.80 |
| | | 5 poles | | | JB16-5 | 1SNK916305R0000 | 10 | 27.60 |
| | | 10 poles | | | JB16-10 | 1SNK916310R0000 | 10 | 56.60 |
| 3 | **Cross spacing jumpers** | Universal screw jumper bar kit N°I | | | BJDP1 | 1SNA179623R0300 | 10 | 7.00 |
| | | Universal screw jumper bar kit N°II | | | BJDP2 | 1SNA179624R0400 | 10 | 6.00 |
| 4 | **Circuit separators** | 3 mm | 0.118 in | Grey | SCFCV1-2 | 1SNA116795R1100 | 10 | 8.00 |
| 5 | **Test sockets** | DIA 4 mm | 0.157 in | | AL4-M4 | 1SNA206723R0300 | 50 | 1.30 |
| 6 | **Test plugs** | DIA 4 mm | 0.157 in | White | FC4 | 1SNA167860R0100 | 10 | |
| 7 | **Protecting covers** | Length 1 m | 39 in | Transparent | CPV1-2 | 1SNA176816R1200 | 1 | |
| 8 | **Terminal block markers** | Blank card | | White | RC1010 | 1SNA238000R1600 | 10 | 1.30 |

Complete list of accessories is indicated in the terminal block datasheet.
Some accessories such as jumper bars may modify the terminal block's ratings: complete information in the accessories catalogue pages.

### Ground screw clamp terminal blocks

| Description | | Color | Type | Part Number | Pkg qty | Weight (1 pce) g |
|---|---|---|---|---|---|---|
| **Ground** | Profile aligned with M35/16... | Green-yellow | M35/16.P | 1SNA165111R1400 | 20 | 50.50 |

Technical data valid for copper conductors only.



1SNC161022S0201 - Rev. B

# D70/22 screw clamp terminal blocks
## Feed-through - 22 mm 0.866 in spacing

**70 mm²**
00 AWG

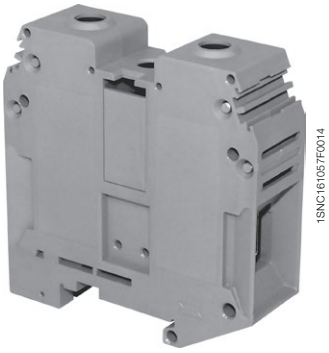


D70/22

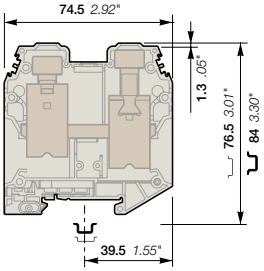


**22 mm** 0.866 in spacing

### Description

- Closed terminal block: no end section needed, optimized rigidity,
- Use of jumper bars requires the user to cut out the partition.

### Ordering details

| Description | | Color | Type | Part Number | | Pkg qty | Weight (1 pce) g |
|---|---|---|---|---|---|---|---|
| **Feed-through** | Closed block | Grey | D70/22 | 1SNA400305R1000 | | 10 | 158.10 |
| | | Blue | D70/22.N | 1SNA400306R1100 | | 10 | 158.10 |
| | | Yellow | D70/22.YL | 1SNA400789R0000 | | 10 | 158.10 |

### Main technical data

| Connecting capacity | | IEC | UL | CSA |
|---|---|---|---|---|
| **1 conductor per clamp** | Rigid - Solid / Stranded | 16-95 mm² | 4-00 AWG | 4-00 AWG |
| | Flexible | 16-70 mm² | | |
| | with insulated ferrule | | | |
| | Gauge | B11 | | |
| **Rated current / Rated cross section** | | 192 A / 70 mm² | 159 A / 00 AWG | 159 A / 00 AWG |
| **Rated short-time withstand current** (1s) | | 8400 A | | |
| **Rated voltage** | | 1000 V | 600 V | 600 V |
| **Impulse withstand voltage** | | 8000 V | | |
| **Protection** | | IP10 | NEMA | |

### Mounting instructions

| | |
|---|---|
| Rail | TH 35-7.5, TH 35-15 |
| Wire stripping length | 25 mm 0.98 in |
| Tool | Allen key Ø 6 mm Ø 0.236 in |
| Torque | 6 - 7 N.m 53.4 - 62.3 lb.in |

The connecting capacity data for one Rigid - Solid / Stranded - Flexible conductor (when applicable) is a mandatory information required by IEC, UL and CSA standards.
All other data are provided as supplementary information only. For more details, please consult our CB, UL or CSA certificates and technical datasheet available on http://www.te.com

CE | CB | RoHS | USR CNR | CSA | Gost R

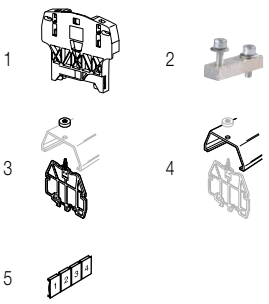


### Accessories

| | Description | | | Color | Type | Part Number | | Pkg qty | Weight (1 pce) g |
|---|---|---|---|---|---|---|---|---|---|
| 1 | **End stops** | 12 mm | 0.472 in | Grey | BAZH1 | 1SNK900102R0000 | | 50 | 24.00 |
| 2 | **Jumper bars** | 2 poles | 192 A | | JB22-2 | 1SNK922302R0000 | | 5 | 27.00 |
| | | 3 poles | | | JB22-3 | 1SNK922303R0000 | | 5 | 43.30 |
| | | 5 poles | | | JB22-5 | 1SNK922305R0000 | | 5 | 76.10 |
| | | 10 poles | | | JB22-10 | 1SNK922310R0000 | | 5 | 157.40 |
| 3 | **Circuit separators** | 3 mm | 0.118 in | Grey | SCFCV4 | 1SNA116797R1300 | | 10 | |
| 4 | **Protecting covers** | Transparent, length 1 m 39 in | | Transparent | CPV4-5 | 1SNA176791R2100 | | 1 | |
| 5 | **Terminal block markers** | Blank card | | White | RC1010 | 1SNA238000R1600 | | 1 | 1.30 |

Complete list of accessories is indicated in the terminal block datasheet.
Some accessories such as jumper bars may modify the terminal block's ratings: complete information in the accessories catalogue pages.

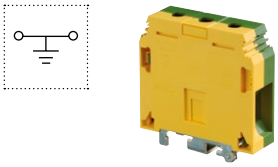

### Ground screw clamp terminal blocks

| Description | | Color | Type | Part Number | | Pkg qty | Weight (1 pce) g |
|---|---|---|---|---|---|---|---|
| **Ground** | Profile aligned with D70/22... | Green-yellow | D70/22.P | 1SNA400772R1300 | | 10 | 222.00 |

Technical data valid for copper conductors only.

# D95/26 screw clamp terminal blocks
## Feed-through - 26 mm 1.024 in spacing

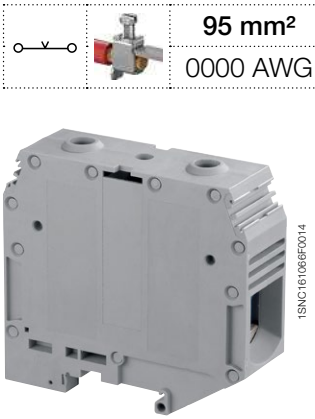


D95/26

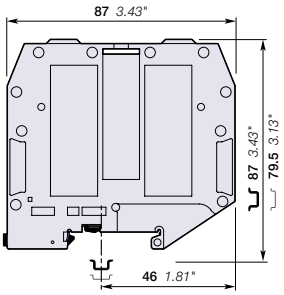


**26 mm** 1.024 in spacing

| | | |
|---|---|---|
| | | 95 mm² |
| | | 0000 AWG |

### Description

- Closed terminal block: no end section needed, optimized rigidity,
- Use of jumper bars requires the user to cut out the partition.

### Ordering details

| Description | | Color | Type | Part Number | | Pkg qty | Weight (1 pce) g |
|---|---|---|---|---|---|---|---|
| **Feed-through** | Closed block with partition | Grey | D95/26 | 1SNA400370R2400 | | 10 | 215.00 |
| | | Blue | D95/26.N | 1SNA400371R1100 | | 10 | 215.00 |
| | | Yellow | D95/26.YL | 1SNA400791R0000 | | 10 | 215.00 |

### Main technical data

| Connecting capacity | | IEC | UL | CSA |
|---|---|---|---|---|
| **1 conductor per clamp** | Rigid - Solid / Stranded | 35-120 mm² | 2-0000 AWG | 2-0000 AWG |
| | Flexible | 35-95 mm² | | |
| | with insulated ferrule | | | |
| | Gauge | B12 | | |
| **Rated current / Rated cross section** | | 232 A / 95 mm² | 230 A / 0000 AWG | 230 A / 0000 AWG |
| **Rated short-time withstand current** (1s) | | 11400 A | | |
| **Rated voltage** | | 1000 V | 600 V | 600 V |
| **Impulse withstand voltage** | | 8000 V | | |
| **Protection** | | IP10 | NEMA | |

### Mounting instructions

| | |
|---|---|
| Rail | TH 35-7.5, TH 35-15 |
| Wire stripping length | 26 mm 1.02 in |
| Tool | Allen key Ø 6 mm Ø 0.236 in |
| Torque | 9 - 9.5 N.m 79.5 - 83.9 lb.in |

The connecting capacity data for one Rigid - Solid / Stranded - Flexible conductor (when applicable) is a mandatory information required by IEC, UL and CSA standards.
All other data are provided as supplementary information only. For more details, please consult our CB, UL or CSA certificates and technical datasheet available on http://www.te.com

CE RoHS USR CSA Gost R

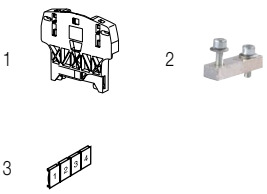


### Accessories

| | Description | | | Color | Type | Part Number | | Pkg qty | Weight (1 pce) g |
|---|---|---|---|---|---|---|---|---|---|
| 1 | **End stops** | 12 mm | 0.472 in | Grey | BAZH1 | 1SNK900102R0000 | | 50 | 24.00 |
| 2 | **Jumper bars** | 2 poles | 232 A | | JB26-2 | 1SNK926302R0000 | | 5 | 41.20 |
| | | 3 poles | | | JB26-3 | 1SNK926303R0000 | | 5 | 65.70 |
| | | 5 poles | | | JB26-5 | 1SNK926305R0000 | | 5 | 115.70 |
| | | 10 poles | | | JB26-10 | 1SNK926310R0000 | | 5 | 241.50 |
| 3 | **Terminal block markers** | Blank card | | White | RC1010 | 1SNA238000R1600 | | 1 | 1.30 |

Complete list of accessories is indicated in the terminal block datasheet.
Some accessories such as jumper bars may modify the terminal block's ratings: complete information in the accessories catalogue pages.

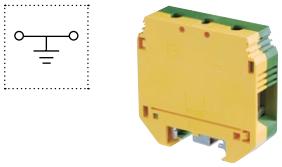

### Ground screw clamp terminal blocks

| Description | | Color | Type | Part Number | | Pkg qty | Weight (1 pce) g |
|---|---|---|---|---|---|---|---|
| **Ground** | Profile aligned with D95/26... | Green-yellow | D95/26.P | 1SNA400620R1700 | | 10 | 278.00 |

Technical data valid for copper conductors only.

# D150/31.D10 screw clamp terminal blocks
## Feed-through - 31 mm 1.220 in spacing

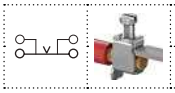

**150 mm²**

1SNC161004F0014

**D150/31.D10**

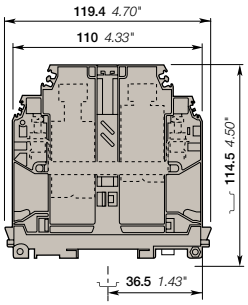


**31 mm** 1.220 in spacing

### Description

- Use of jumper bars requires the user to cut-out the partition,
- Closed terminal block: no end section needed, optimized rigidity,
- Ease your voltage monitoring or distribution with the two built-in derivations.

### Ordering details

| Description | | Color | Type | Part Number | | Pkg qty | Weight (1 pce) g |
|---|---|---|---|---|---|---|---|
| **Feed-through** | Closed block with 2 x 10 mm² derivations. | Grey | D150/31.D10 | 1SNA399715R0400 | | 5 | 385.00 |
| | | Blue | D150/31.D10.N | 1SNA399717R0600 | | 5 | 385.00 |
| | | Yellow | D150/31.D10.YL | 1SNA400778R0000 | | 5 | 385.00 |

### Main technical data

| Connecting capacity | | IEC | UL | CSA |
|---|---|---|---|---|
| **Main circuit with 1 conductor per clamp** | Rigid - Solid / Stranded | 35-185 mm² | | |
| | Flexible | 35-150 mm² | | |
| | with insulated ferrule | | | |
| | Gauge | B14 | | |
| **Derivation with 1 conductor per clamp** | Rigid - Solid / Stranded | 0.5-16 mm² | | |
| | Flexible | 0.5-10 mm² | | |
| | with insulated ferrule | | | |
| | Gauge | B6 | | |
| **Rated current / Rated cross section** | | | | |
| | Main circuit | 309 A / 150 mm² | | |
| | Derivation | 57 A / 10 mm² | | |
| **Rated short-time withstand current** (1s) | | 18000 A | | |
| **Rated voltage** | | 1000 V | | |
| **Impulse withstand voltage** | | 12000 V | | |
| **Protection** | | IP10 | NEMA | |

### Mounting instructions

| | | |
|---|---|---|
| Rail | | TH 35-7.5, TH 35-15 |
| Main circuit | | |
| Wire stripping length | | 35 mm<br>1.37 in |
| Tool | | Allen key<br>Ø 8 mm<br>Ø 0.315 in |
| Torque | | 10 - 15 N.m<br>89 - 132 lb.in |
| Derivation | | |
| Wire stripping length | | 12 mm<br>0.47 in |
| Tool | | Flat screwdriver<br>Ø 4 mm<br>Ø 0.157 in |
| Torque | | 1.2 - 1.4 N.m<br>10.6 - 12.3 lb.in |

The connecting capacity data for one Rigid - Solid / Stranded - Flexible conductor (when applicable) is a mandatory information required by IEC, UL and CSA standards.
All other data are provided as supplementary information only. For more details, please consult our CB, UL or CSA certificates and technical datasheet available on http://www.te.com

CE RoHS Gost R

IP20 Protection with protecting cover

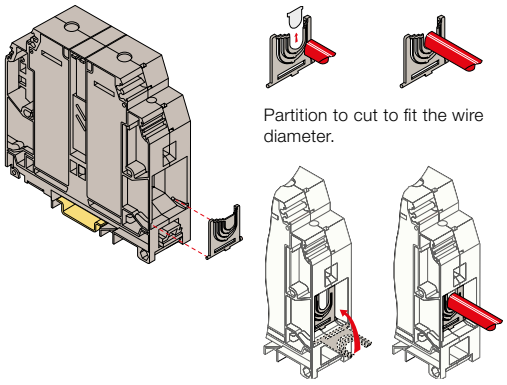

Partition to cut to fit the wire diameter.

Locking foot operating with screwdriver DIA 4 0.157 in

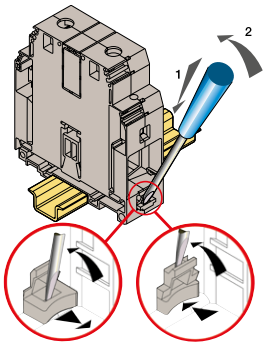


Sideopening "bistable action".
The locking foot remains in open or closed position.

### Accessories

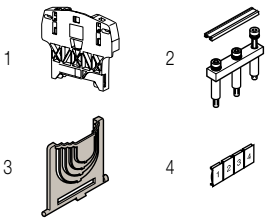


| | Description | | | Color | Type | Part Number | | Pkg qty | Weight (1 pce) g |
|---|---|---|---|---|---|---|---|---|---|
| 1 | **End stops** | 12 mm | 0.472 in | Grey | BAZH1 | 1SNK900102R0000 | | 50 | 24.00 |
| 2 | **Jumper bars** | 2 poles | 309 A | | BJMI31.2 | 1SNA206053R0700 | | 1 | 120.00 |
| | | 3 poles | | | BJMI31.3 | 1SNA206054R0000 | | 1 | 190.00 |
| 3 | **Protecting covers** | | | | CPBP1 | 1SNA399788R1600 | | 20 | |
| 4 | **Terminal block markers** | Blank card | | White | RC1010 | 1SNA238000R1600 | | 1 | 1.30 |

Complete list of accessories is indicated in the terminal block datasheet.
Some accessories such as jumper bars may modify the terminal block's ratings: complete information in the accessories catalogue pages.

Technical data valid for copper conductors only.

1SNC161029S0201 - Rev. D

# D240/36.D10 screw clamp terminal blocks
## Feed-through - 36 mm 1.417 in spacing

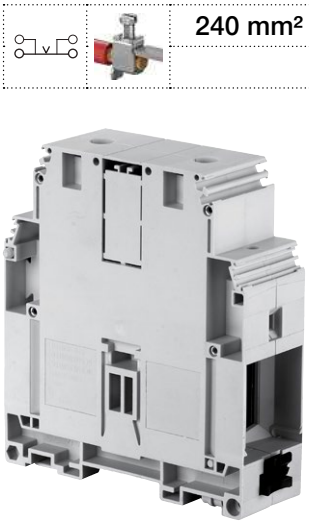

**240 mm²**



1SNC161003F0014

**D240/36.D10**

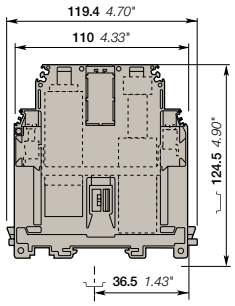


**36 mm** 1.417 in spacing

### Description

- Closed terminal block: no end section needed, optimized rigidity,
- Ease your voltage monitoring or distribution with the 2 built-in derivations,
- Use of jumper bars requires the user to cut out the partition.

### Ordering details

| Description | | Color | Type | Part Number | Pkg qty | Weight (1 pce) g |
|---|---|---|---|---|---|---|
| **Feed-through** | Closed block with 2 x 10 mm² derivations. | Grey | D240/36.D10 | 1SNA399704R1200 | 5 | 542.00 |
| | | Blue | D240/36.D10.N | 1SNA399706R1400 | 5 | 542.00 |
| | | Yellow | D240/36.D10.YL | 1SNA400779R0000 | 5 | 542.00 |

### Main technical data

| Connecting capacity | | IEC | UL | CSA |
|---|---|---|---|---|
| **Main circuit with 1 conductor per clamp** | Rigid - Solid / Stranded | 50-300 mm² | | |
| | Flexible | 50-240 mm² | | |
| | with insulated ferrule | | | |
| | Gauge | B14 | | |
| **Derivation with 1 conductor per clamp** | Rigid - Solid / Stranded | 0.5-16 mm² | | |
| | Flexible | 0.5-10 mm² | | |
| | with insulated ferrule | | | |
| | Gauge | B6 | | |
| **Rated current / Rated cross section** | | | | |
| | Main circuit | 415 A / 240 mm² | | |
| | Derivation | 57 A / 10 mm² | | |
| **Rated short-time withstand current** (1s) | | 28800 A | | |
| **Rated voltage** | | 1000 V | | |
| **Impulse withstand voltage** | | 8000 V | | |
| **Protection** | | IP10 | NEMA | |

### Mounting instructions

| | | |
|---|---|---|
| Rail | | TH 35-7.5, TH 35-15 |
| Main circuit | | |
| Wire stripping length | | 35 mm<br>1.37 in |
| Tool | | Allen key<br>Ø 8 mm<br>Ø 0.39 in |
| Torque | | 10 - 15 N.m<br>89 - 132 lb.in |
| Derivation | | |
| Wire stripping length | | 12 mm<br>0.47 in |
| Tool | | Flat screwdriver<br>Ø 4 mm<br>Ø 0.157 in |
| Torque | | 1.2 - 1.4 N.m<br>10.6 - 12.3 lb.in |

The connecting capacity data for one Rigid - Solid / Stranded - Flexible conductor (when applicable) is a mandatory information required by IEC, UL and CSA standards.
All other data are provided as supplementary information only. For more details, please consult our CB, UL or CSA certificates and technical datasheet available on http://www.te.com

CE RoHS Gost R

IP20 Protection with protecting cover

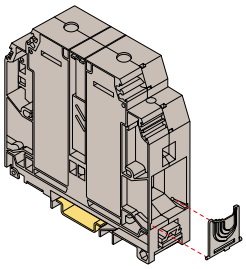

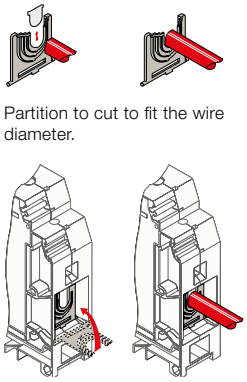

Partition to cut to fit the wire diameter.

Locking foot operating with screwdriver DIA 4 0.157 in

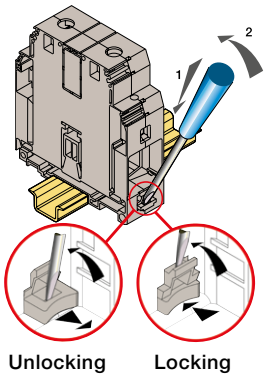


Sideopening "bistable action".
The locking foot remains in open or closed position.

### Accessories

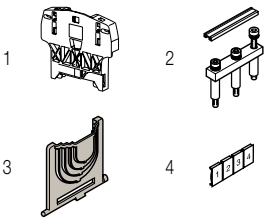

| | Description | | | Color | Type | Part Number | Pkg qty | Weight (1 pce) g |
|---|---|---|---|---|---|---|---|---|
| 1 | **End stops** | 12 mm | 0.472 in | Grey | BAZH1 | 1SNK900102R0000 | 50 | 24.00 |
| 2 | **Jumper bars** | 2 poles | 415 A | | BJMI36.2 | 1SNA206126R2500 | 1 | 170.00 |
| | | 3 poles | | | BJMI36.3 | 1SNA206223R0600 | 1 | 260.00 |
| 3 | **Protecting covers** | | | | CPBP2 | 1SNA399787R0500 | 20 | 1.30 |
| 4 | **Terminal block markers** | Blank card | | White | RC1010 | 1SNA238000R1600 | 1 | 1.30 |

Complete list of accessories is indicated in the terminal block datasheet.
Some accessories such as jumper bars may modify the terminal block's ratings: complete information in the accessories catalogue pages.

Technical data valid for copper conductors only.



1SNC161032S0201 - Rev. C

# MA2.5/5.P screw clamp terminal blocks

## Ground - 5 mm 0.197 in spacing

**2.5 mm²**
12 AWG

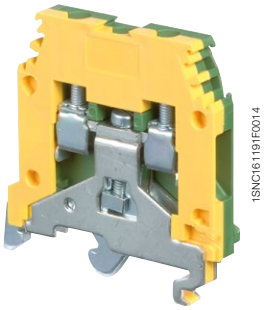


MA2.5/5.P

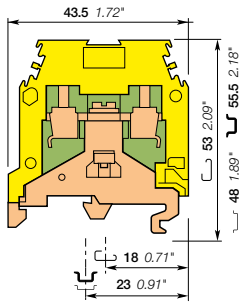


**5 mm** 0.197 in spacing

### Description

- Reliable electrical and mechanical contact with the rail,
- Flexibility: snap onto symmetrical and asymmetrical rails.

### Ordering details

| Description | | Color | Type | Part Number | | Pkg qty | Weight (1 pce) g |
|---|---|---|---|---|---|---|---|
| **Ground** | Screw rail connection | Green-yellow | MA2.5/5.P | 1SNA165488R2700 | | 50 | 18.00 |

### Main technical data

| Connecting capacity | | IEC | UL | CSA |
|---|---|---|---|---|
| **1 conductor per clamp** | Rigid - Solid / Stranded | 0.2-4 mm² | 22-12 AWG | 22-12 AWG |
| | Flexible | 0.22-2.5 mm² | | |
| | with insulated ferrule | | | |
| | Gauge | A3 | | |
| **Rated cross section** | | 2.5 mm² | 12 AWG | 12 AWG |
| **Rated short-time withstand current** (1s) | | 300 A | | |

### Mounting instructions

| | | |
|---|---|---|
| Rail | | G32, TH 35-7.5, TH 35-15 |
| Wire stripping length | | 10 mm<br>0.39 in |
| Screw clamp Tool | | Flat screwdriver<br>Ø 3.5 mm<br>Ø 0.14 in |
| Torque | | 0.4 - 0.6 N.m<br>3.5 - 5.3 lb.in |
| Rail connection screw Tool | | Flat screwdriver<br>Ø 3.5 mm<br>Ø 0.14 in |
| Torque | | 0.6 N.m<br>5.5 lb.in |

The connecting capacity data for one Rigid - Solid / Stranded - Flexible conductor (when applicable) is a mandatory information required by IEC, UL and CSA standards.
All other data are provided as supplementary information only. For more details, please consult our CB, UL or CSA certificates and technical datasheet available on http://www.te.com

CE RoHS USR cCSAus Gost R

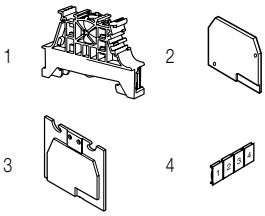


### Accessories

| | Description | | | Color | Type | Part Number | | Pkg qty | Weight (1 pce) g |
|---|---|---|---|---|---|---|---|---|---|
| 1 | **End stops** | 10 mm | 0.394 in | Grey | BAM4 | 1SNK900001R0000 | | 50 | 12.00 |
| | | 9 mm | 0.354 in | | BAZ1 | 1SNK900002R0000 | | 50 | 4.70 |
| 2 | **End sections** | 2.8 mm | 0.110 in | Grey | FEM6 | 1SNA118368R1600 | | 20 | 2.40 |
| 3 | **Circuit separators** | 3 mm | 0.118 in | Grey | SCF6 | 1SNA118707R0300 | | 20 | |
| 4 | **Terminal block markers** | Blank card | | White | RC510 | 1SNA231000R0700 | | 1 | 5.20 |

Complete list of accessories is indicated in the terminal block datasheet.
Some accessories such as jumper bars may modify the terminal block's ratings: complete information in the accessories catalogue pages.

Technical data valid for copper conductors only.

# D2.5/5.P screw clamp terminal blocks
## Ground - 5 mm 0.197 in spacing

**2.5 mm²**
12 AWG

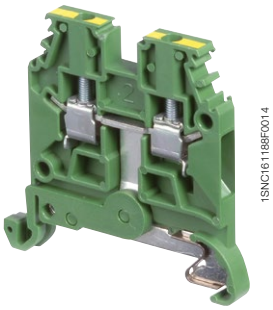


D2.5/5.P

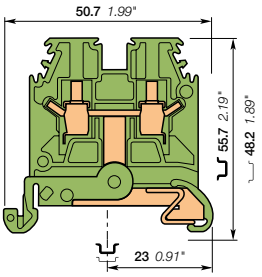


**5 mm** 0.197 in spacing

### Description

- Screwless rail contact,
- Reliable electrical and mechanical contact with the rail.

### Ordering details

| Description | | Color | Type | Part Number | | Pkg qty | Weight (1 pce) g |
|---|---|---|---|---|---|---|---|
| **Ground** | Screwless rail connection | Green-yellow | D2.5/5.P | 1SNA165909R0500 | | 50 | 10.00 |

### Main technical data

| Connecting capacity | | IEC | UL | CSA |
|---|---|---|---|---|
| **1 conductor per clamp** | Rigid - Solid / Stranded | 0.2-4 mm² | 24-12 AWG | |
| | Flexible | 0.22-2.5 mm² | | |
| | with insulated ferrule | | | |
| | Gauge | A3 | | |
| **Rated cross section** | | 2.5 mm² | 12 AWG | |
| **Rated short-time withstand current** (1s) | | 300 A | | |

### Mounting instructions

| | |
|---|---|
| Rail | TH 35-7.5, TH 35-15 |
| Wire stripping length | 10 mm 0.39 in |
| Screw clamp Tool | Flat screwdriver Ø 3.5 mm Ø 0.14 in |
| Torque | 0.4 - 0.6 N.m 3.5 - 5.3 lb.in |

The connecting capacity data for one Rigid - Solid / Stranded - Flexible conductor (when applicable) is a mandatory information required by IEC, UL and CSA standards.
All other data are provided as supplementary information only. For more details, please consult our CB, UL or CSA certificates and technical datasheet available on http://www.te.com

CE RoHS USR CNR Gost R

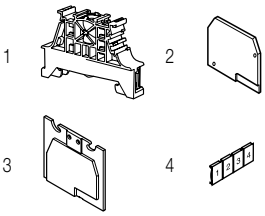


### Accessories

| | Description | | | Color | Type | Part Number | | Pkg qty | Weight (1 pce) g |
|---|---|---|---|---|---|---|---|---|---|
| 1 | **End stops** | 10 mm | 0.394 in | Grey | BAM4 | 1SNK900001R0000 | | 50 | 12.00 |
| | | 9 mm | 0.354 in | | BAZ1 | 1SNK900002R0000 | | 50 | 4.70 |
| 2 | **End sections** | 2.8 mm | 0.110 in | Grey | FEM6 | 1SNA118368R1600 | | 20 | 2.40 |
| 3 | **Circuit separators** | 3 mm | 0.118 in | Grey | SCF6 | 1SNA118707R0300 | | 20 | |
| 4 | **Terminal block markers** | Blank card | | White | RC510 | 1SNA231000R0700 | | 1 | 5.20 |

Complete list of accessories is indicated in the terminal block datasheet.
Some accessories such as jumper bars may modify the terminal block's ratings: complete information in the accessories catalogue pages.

Technical data valid for copper conductors only.



1SNC161047S0201 - Rev. B

# M4/6.P screw clamp terminal blocks
## Ground - 6 mm 0.236 in spacing

**4 mm²**
12 AWG

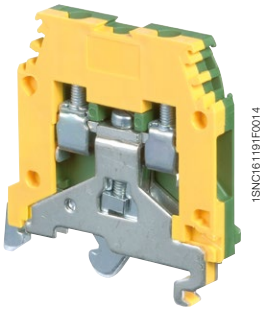


**M4/6.P**

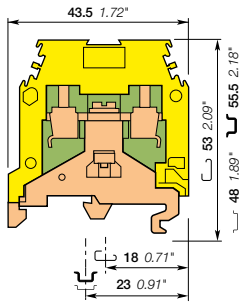


**6 mm** 0.236 in spacing

### Description

- Reliable electrical and mechanical contact with the rail,
- Flexibility: snap onto symmetrical and asymmetrical rails.

### Ordering details

| Description | | Color | Type | Part Number | | Pkg qty | Weight (1 pce) g |
|---|---|---|---|---|---|---|---|
| **Ground** | Screw rail connection | Green-yellow | M4/6.P | 1SNA165113R1600 | | 50 | 21.00 |

### Main technical data

| Connecting capacity | | IEC | UL | CSA |
|---|---|---|---|---|
| **1 conductor per clamp** | Rigid - Solid / Stranded | 0.2-4 mm² | 22-12 AWG | 18-12 AWG |
| | Flexible | 0.22-4 mm² | | |
| | with insulated ferrule | | | |
| | Gauge | A4 | | |
| **Rated cross section** | | 4 mm² | 12 AWG | 12 AWG |
| **Rated short-time withstand current** (1s) | | 480 A | | |

### Mounting instructions

| | | |
|---|---|---|
| Rail | | G32, TH 35-7.5, TH 35-15 |
| Wire stripping length | | 9.5 mm<br>0.37 in |
| Screw clamp Tool | | Flat screwdriver<br>Ø 4 mm<br>Ø 0.16 in |
| Torque | | 0.5 - 0.8 N.m<br>4.4 - 7.1 lb.in |
| Rail connection screw Tool | | Flat screwdriver<br>Ø 4 mm<br>Ø 0.16 in |
| Torque | | 0.8 N.m<br>7 lb.in |

The connecting capacity data for one Rigid - Solid / Stranded - Flexible conductor (when applicable) is a mandatory information required by IEC, UL and CSA standards.
All other data are provided as supplementary information only. For more details, please consult our CB, UL or CSA certificates and technical datasheet available on http://www.te.com

CE RoHS USR CSA Gost R

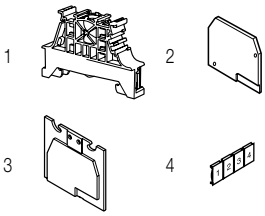


### Accessories

| | Description | | | Color | Type | Part Number | | Pkg qty | Weight (1 pce) g |
|---|---|---|---|---|---|---|---|---|---|
| 1 | **End stops** | 10 mm | 0.394 in | Grey | BAM4 | 1SNK900001R0000 | | 50 | 12.00 |
| | | 9 mm | 0.354 in | | BAZ1 | 1SNK900002R0000 | | 50 | 4.70 |
| 2 | **End sections** | 2.8 mm | 0.110 in | Grey | FEM6 | 1SNA118368R1600 | | 20 | 2.40 |
| 3 | **Circuit separators** | 3 mm | 0.118 in | Grey | SCF6 | 1SNA118707R0300 | | 20 | |
| 4 | **Terminal block markers** | Blank card | | White | RC610 | 1SNA233000R0100 | | 1 | 7.50 |

Complete list of accessories is indicated in the terminal block datasheet.
Some accessories such as jumper bars may modify the terminal block's ratings: complete information in the accessories catalogue pages.

Technical data valid for copper conductors only.

# D4/6.P screw clamp terminal blocks
## Ground - 6 mm 0.236 in spacing

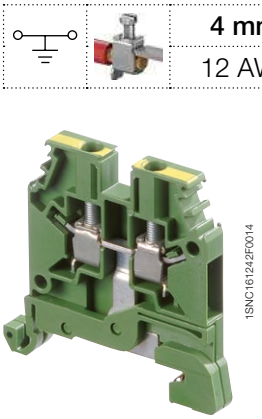


D4/6.P

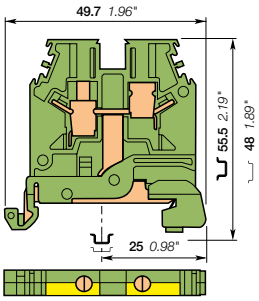


**6 mm** 0.236 in spacing

| | |
|---|---|
| | **4 mm²** |
| | 12 AWG |

### Description

- Screwless rail contact,
- Reliable electrical and mechanical contact with the rail.

### Ordering details

| Description | | Color | Type | Part Number | | Pkg qty | Weight (1 pce) g |
|---|---|---|---|---|---|---|---|
| **Ground** | Screwless rail connection | Green-yellow | D4/6.P | 1SNA165809R0100 | | 50 | 12.00 |

### Main technical data

| Connecting capacity | | IEC | UL | CSA |
|---|---|---|---|---|
| **1 conductor per clamp** | Rigid - Solid / Stranded | 0.2-4 mm² | 24-12 AWG | |
| | Flexible | 0.22-4 mm² | | |
| | with insulated ferrule | | | |
| | Gauge | A4 | | |
| **Rated cross section** | | 4 mm² | 12 AWG | |
| **Rated short-time withstand current** (1s) | | 480 A | | |

### Mounting instructions

| | |
|---|---|
| Rail | TH 35-7.5, TH 35-15 |
| Wire stripping length | 9.5 mm 0.37 in |
| Screw clamp Tool | Flat screwdriver Ø 4 mm Ø 0.16 in |
| Torque | 0.5 - 0.8 N.m 4.4 - 7.1 lb.in |

The connecting capacity data for one Rigid - Solid / Stranded - Flexible conductor (when applicable) is a mandatory information required by IEC, UL and CSA standards.
All other data are provided as supplementary information only. For more details, please consult our CB, UL or CSA certificates and technical datasheet available on http://www.te.com

CE RoHS USR CNR Gost R

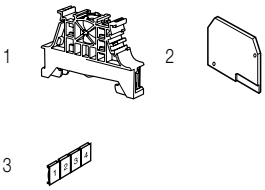


### Accessories

| | Description | | | Color | Type | Part Number | | Pkg qty | Weight (1 pce) g |
|---|---|---|---|---|---|---|---|---|---|
| 1 | **End stops** | 10 mm | 0.394 in | Grey | BAM4 | 1SNK900001R0000 | | 50 | 12.00 |
| | | 9 mm | 0.354 in | | BAZ1 | 1SNK900002R0000 | | 50 | 4.70 |
| 2 | **End sections** | 2.8 mm | 0.110 in | Grey | FEM6 | 1SNA118368R1600 | | 20 | 2.40 |
| 3 | **Terminal block markers** Blank card | | | White | RC610 | 1SNA233000R0100 | | 1 | 7.50 |

Complete list of accessories is indicated in the terminal block datasheet.
Some accessories such as jumper bars may modify the terminal block's ratings: complete information in the accessories catalogue pages.

Technical data valid for copper conductors only.

# M4/6.3A.P screw clamp terminal blocks

## Ground - 6 mm 0.236 in spacing

**4 mm²**
12 AWG

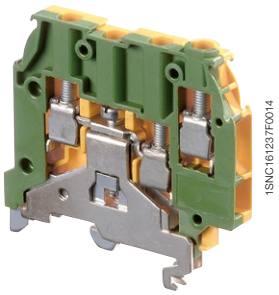


**M4/6.3A.P**

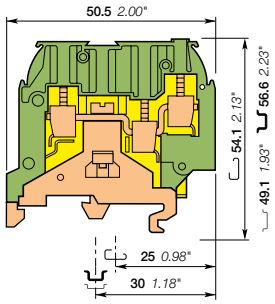


**6 mm** 0.236 in spacing

## Description

- Reliable electrical and mechanical contact with the rail,
- Flexibility: snap onto symmetrical and asymmetrical rails.

## Ordering details

| Description | | Color | Type | Part Number | | Pkg qty | Weight (1 pce) g |
|---|---|---|---|---|---|---|---|
| **Ground** | Screw rail connection | Green-yellow | M4/6.3A.P | 1SNA195637R1200 | | 50 | 22.00 |

## Main technical data

| Connecting capacity | | IEC | UL | CSA |
|---|---|---|---|---|
| **1 conductor per clamp** | Rigid - Solid / Stranded | 0.2-4 mm² | | 24-12 AWG |
| | Flexible | 0.22-4 mm² | | |
| | with insulated ferrule | | | |
| | Gauge | A4 | | |
| **Rated cross section** | | 4 mm² | | 12 AWG |
| **Rated short-time withstand current** (1s) | | 480 A | | |

## Mounting instructions

| | | |
|---|---|---|
| Rail | | G32, TH 35-7.5, TH 35-15 |
| Wire stripping length | | 9.5 mm<br>0.37 in |
| Screw clamp Tool | | Flat screwdriver<br>Ø 4 mm<br>Ø 0.16 in |
| Torque | | 0.5 - 0.8 N.m<br>4.4 - 7.1 lb.in |
| Rail connection screw Tool | | Flat screwdriver<br>Ø 4 mm<br>Ø 0.16 in |
| Torque | | 0.8 N.m<br>7 lb.in |

The connecting capacity data for one Rigid - Solid / Stranded - Flexible conductor (when applicable) is a mandatory information required by IEC, UL and CSA standards.
All other data are provided as supplementary information only. For more details, please consult our CB, UL or CSA certificates and technical datasheet available on http://www.te.com

CE RoHS CSA Gost R

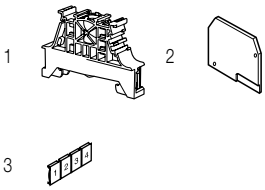


## Accessories

| | Description | | | Color | Type | Part Number | | Pkg qty | Weight (1 pce) g |
|---|---|---|---|---|---|---|---|---|---|
| 1 | **End stops** | 10 mm | 0.394 in | Grey | BAM4 | 1SNK900001R0000 | | 50 | 12.00 |
| | | 9 mm | 0.354 in | | BAZ1 | 1SNK900002R0000 | | 50 | 4.70 |
| 2 | **End sections** | 3 mm | 0.118 in | Grey | FEM3A | 1SNA116576R1500 | | 20 | 3.30 |
| 3 | **Terminal block markers** Blank card | | | White | RC610 | 1SNA233000R0100 | | 1 | 7.50 |

Complete list of accessories is indicated in the terminal block datasheet.
Some accessories such as jumper bars may modify the terminal block's ratings: complete information in the accessories catalogue pages.

Technical data valid for copper conductors only.

# M4/6.4A.P screw clamp terminal blocks
## Ground - 6 mm 0.236 in spacing

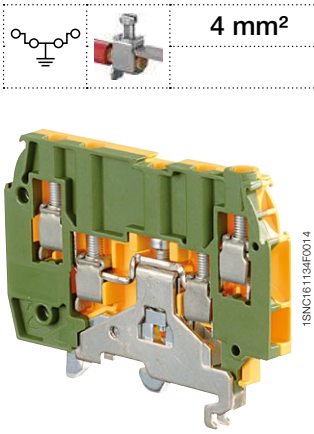


M4/6.4A.P

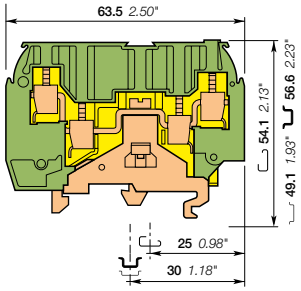


**6 mm** 0.236 in spacing

4 mm²

## Description

- Reliable electrical and mechanical contact with the rail,
- Flexibility: snap onto symmetrical and asymmetrical rails.

## Ordering details

| Description | | Color | Type | Part Number | | Pkg qty | Weight (1 pce) g |
|---|---|---|---|---|---|---|---|
| **Ground** | Screw rail connection | Green-yellow | M4/6.4A.P | 1SNA195638R2300 | | 50 | 22.00 |

## Main technical data

| Connecting capacity | | IEC | UL | CSA |
|---|---|---|---|---|
| **1 conductor per clamp** | Rigid - Solid / Stranded | 0.2-4 mm² | | |
| | Flexible | 0.22-4 mm² | | |
| | with insulated ferrule | | | |
| | Gauge | A4 | | |
| **Rated cross section** | | 4 mm² | | |
| **Rated short-time withstand current** (1s) | | 480 A | | |

## Mounting instructions

| | | |
|---|---|---|
| Rail | | G32, TH 35-7.5, TH 35-15 |
| Wire stripping length | | 9.5 mm<br>0.37 in |
| Screw clamp Tool | | Flat screwdriver<br>Ø 4 mm<br>Ø 0.16 in |
| Torque | | 0.5 - 0.8 N.m<br>4.4 - 7.1 lb.in |
| Rail connection screw Tool | | Flat screwdriver<br>Ø 4 mm<br>Ø 0.16 in |
| Torque | | 0.8 N.m<br>7 lb.in |

The connecting capacity data for one Rigid - Solid / Stranded - Flexible conductor (when applicable) is a mandatory information required by IEC, UL and CSA standards.
All other data are provided as supplementary information only. For more details, please consult our CB, UL or CSA certificates and technical datasheet available on http://www.te.com

CE RoHS Gost R

## Accessories

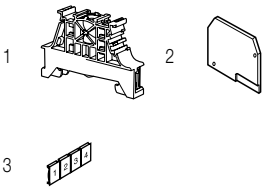


| | Description | | | Color | Type | Part Number | | Pkg qty | Weight (1 pce) g |
|---|---|---|---|---|---|---|---|---|---|
| 1 | **End stops** | 10 mm | 0.394 in | Grey | BAM4 | 1SNK900001R0000 | | 50 | 12.00 |
| | | 9 mm | 0.354 in | | BAZ1 | 1SNK900002R0000 | | 50 | 4.70 |
| 2 | **End sections** | 3 mm | 0.118 in | Grey | FEM4A | 1SNA116629R2200 | | 20 | 3.80 |
| 3 | **Terminal block markers** Blank card | | | White | RC610 | 1SNA233000R0100 | | 1 | 7.50 |

Complete list of accessories is indicated in the terminal block datasheet.
Some accessories such as jumper bars may modify the terminal block's ratings: complete information in the accessories catalogue pages.

Technical data valid for copper conductors only.

# M6/8.P screw clamp terminal blocks

## Ground - 8 mm 0.315 in spacing

6 mm²
8 AWG

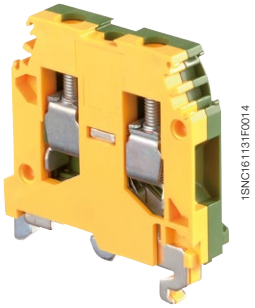


M6/8.P

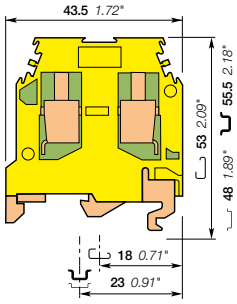


**8 mm** 0.315 in spacing

### Description

- Reliable electrical and mechanical contact with the rail,
- Flexibility: snap onto symmetrical and asymmetrical rails.

### Ordering details

| Description | | Color | Type | Part Number | | Pkg qty | Weight (1 pce) g |
|---|---|---|---|---|---|---|---|
| **Ground** | Screw rail connection | Green-yellow | M6/8.P | 1SNA165114R1700 | | 50 | 26.00 |

### Main technical data

| Connecting capacity | | IEC | UL | CSA |
|---|---|---|---|---|
| **1 conductor per clamp** | Rigid - Solid / Stranded | 0.5-10 mm² | 22-8 AWG | 24-8 AWG |
| | Flexible | 0.5-6 mm² | | |
| | with insulated ferrule | | | |
| | Gauge | A5 | | |
| **Rated cross section** | | 6 mm² | 8 AWG | 8 AWG |
| **Rated short-time withstand current** (1s) | | 720 A | | |

### Mounting instructions

| | |
|---|---|
| Rail | G32, TH 35-7.5, TH 35-15 |
| Wire stripping length | 12 mm<br>0.47 in |
| Screw clamp Tool | Flat screwdriver<br>Ø 4 - 5 mm<br>Ø 0.16 - 0.20 in |
| Torque | 0.8 - 1 N.m<br>7.1 - 8.9 lb.in |
| Rail connection screw Tool | Flat screwdriver<br>Ø 4 mm<br>Ø 0.16 in |
| Torque | 0.8 N.m<br>7 lb.in |

The connecting capacity data for one Rigid - Solid / Stranded - Flexible conductor (when applicable) is a mandatory information required by IEC, UL and CSA standards.
All other data are provided as supplementary information only. For more details, please consult our CB, UL or CSA certificates and technical datasheet available on http://www.te.com

CE RoHS USR CSA Gost R

### Accessories

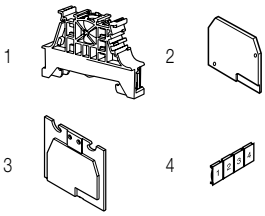


| | Description | | | Color | Type | Part Number | | Pkg qty | Weight (1 pce) g |
|---|---|---|---|---|---|---|---|---|---|
| 1 | **End stops** | 10 mm | 0.394 in | Grey | BAM4 | 1SNK900001R0000 | | 50 | 12.00 |
| | | 9 mm | 0.354 in | | BAZ1 | 1SNK900002R0000 | | 50 | 4.70 |
| 2 | **End sections** | 2.8 mm | 0.110 in | Grey | FEM6 | 1SNA118368R1600 | | 20 | 2.40 |
| 3 | **Circuit separators** | 3 mm | 0.118 in | Grey | SCF6 | 1SNA118707R0300 | | 20 | |
| 4 | **Terminal block markers** | Blank card | | White | RC610 | 1SNA233000R0100 | | 1 | 7.50 |

Complete list of accessories is indicated in the terminal block datasheet.
Some accessories such as jumper bars may modify the terminal block's ratings: complete information in the accessories catalogue pages.

Technical data valid for copper conductors only.

# D6/8.P screw clamp terminal blocks
## Ground - 8 mm 0.315 in spacing

D6/8.P

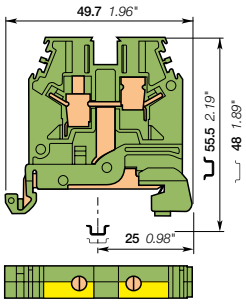


**8 mm** 0.315 in spacing

| | |
|---|---|
| | **6 mm²** |
| | 8 AWG |

### Description
- Screwless rail contact,
- Reliable electrical and mechanical contact with the rail.

### Ordering details

| Description | | Color | Type | Part Number | | Pkg qty | Weight (1 pce) g |
|---|---|---|---|---|---|---|---|
| **Ground** | Screwless rail connection | Green-yellow | D6/8.P | 1SNA165830R2100 | | 50 | 16.00 |

### Main technical data

| Connecting capacity | | IEC | UL | CSA |
|---|---|---|---|---|
| **1 conductor per clamp** | Rigid - Solid / Stranded | 0.2-10 mm² | 24-8 AWG | |
| | Flexible | 0.22-6 mm² | | |
| | with insulated ferrule | | | |
| | Gauge | A5 | | |
| **Rated cross section** | | 6 mm² | 8 AWG | |
| **Rated short-time withstand current** (1s) | | 720 A | | |

### Mounting instructions

| | |
|---|---|
| Rail | TH 35-7.5, TH 35-15 |
| Wire stripping length | 12 mm 0.47 in |
| Screw clamp Tool | Flat screwdriver Ø 4 - 5 mm Ø 0.16 - 0.20 in |
| Torque | 0.8 - 1 N.m 7.1 - 8.9 lb.in |

The connecting capacity data for one Rigid - Solid / Stranded - Flexible conductor (when applicable) is a mandatory information required by IEC, UL and CSA standards.
All other data are provided as supplementary information only. For more details, please consult our CB, UL or CSA certificates and technical datasheet available on http://www.te.com

CE RoHS USR CNR Gost R

### Accessories

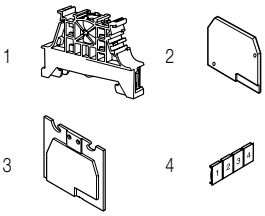


| | Description | | | Color | Type | Part Number | | Pkg qty | Weight (1 pce) g |
|---|---|---|---|---|---|---|---|---|---|
| 1 | **End stops** | 10 mm | 0.394 in | Grey | BAM4 | 1SNK900001R0000 | | 50 | 12.00 |
| | | 9 mm | 0.354 in | | BAZ1 | 1SNK900002R0000 | | 50 | 4.70 |
| 2 | **End sections** | 2.8 mm | 0.110 in | Grey | FEM6 | 1SNA118368R1600 | | 20 | 2.40 |
| 3 | **Circuit separators** | 3 mm | 0.118 in | Grey | SCF6 | 1SNA118707R0300 | | 20 | |
| 4 | **Terminal block markers** | Blank card | | White | RC810 | 1SNA234000R0200 | | 1 | 8.20 |

Complete list of accessories is indicated in the terminal block datasheet.
Some accessories such as jumper bars may modify the terminal block's ratings: complete information in the accessories catalogue pages.

Technical data valid for copper conductors only.

# M10/10.P screw clamp terminal blocks

## Ground - 10 mm 0.394 in spacing

**10 mm²**
6 AWG

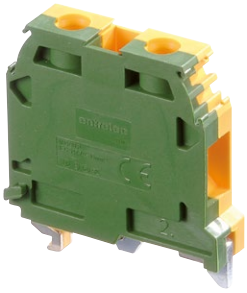


M10/10.P

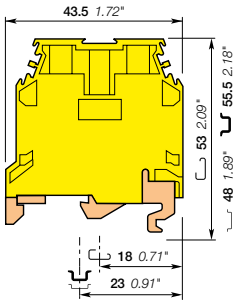


**10 mm** 0.394 in spacing

### Description

- Reliable electrical and mechanical contact with the rail,
- Flexibility: snap onto symmetrical and asymmetrical rails.

### Ordering details

| Description | | Color | Type | Part Number | | Pkg qty | Weight (1 pce) g |
|---|---|---|---|---|---|---|---|
| **Ground** | Screw rail connection | Green-yellow | M10/10.P | 1SNA165115R1000 | | 50 | 29.00 |

### Main technical data

| Connecting capacity | | IEC | UL | CSA |
|---|---|---|---|---|
| **1 conductor per clamp** | Rigid - Solid / Stranded | 0.5-16 mm² | 20-6 AWG | 18-8 AWG |
| | Flexible | 0.5-10 mm² | | |
| | with insulated ferrule | | | |
| | Gauge | B6 | | |
| **Rated cross section** | | 10 mm² | 6 AWG | 8 AWG |
| **Rated short-time withstand current** (1s) | | 1200 A | | |

### Mounting instructions

| | |
|---|---|
| Rail | G32, TH 35-7.5, TH 35-15 |
| Wire stripping length | 12 mm<br>0.47 in |
| Screw clamp Tool | Flat screwdriver<br>Ø 5.5 - 6 mm<br>Ø 0.22 - 0.24 in |
| Torque | 1.2 - 1.4 N.m<br>10.6 - 12.4 lb.in |
| Rail connection screw Tool | Flat screwdriver<br>Ø 4 mm<br>Ø 0.16 in |
| Torque | 0.8 N.m<br>7 lb.in |

The connecting capacity data for one Rigid - Solid / Stranded - Flexible conductor (when applicable) is a mandatory information required by IEC, UL and CSA standards.
All other data are provided as supplementary information only. For more details, please consult our CB, UL or CSA certificates and technical datasheet available on http://www.te.com

CE RoHS USR CSA Gost R

### Accessories

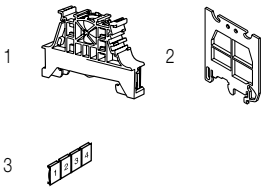

| | Description | | | Color | Type | Part Number | | Pkg qty | Weight (1 pce) g |
|---|---|---|---|---|---|---|---|---|---|
| 1 | **End stops** | 10 mm | 0.394 in | Grey | BAM4 | 1SNK900001R0000 | | 50 | 12.00 |
| | | 9 mm | 0.354 in | | BAZ1 | 1SNK900002R0000 | | 50 | 4.70 |
| 2 | **Circuit separators** | 3 mm | 0.118 in | Grey | SCFM6 | 1SNA114825R0500 | | 20 | 4.00 |
| 3 | **Terminal block markers** | Blank card | | White | RC810 | 1SNA234000R0200 | | 1 | 8.20 |
| | | | | | RC1010 | 1SNA238000R1600 | | 1 | 1.30 |

Complete list of accessories is indicated in the terminal block datasheet.
Some accessories such as jumper bars may modify the terminal block's ratings: complete information in the accessories catalogue pages.

1SNC161009S0201 - Rev. B

Technical data valid for copper conductors only.

# M16/12.P screw clamp terminal blocks

## Ground - 12 mm 0.472 in spacing

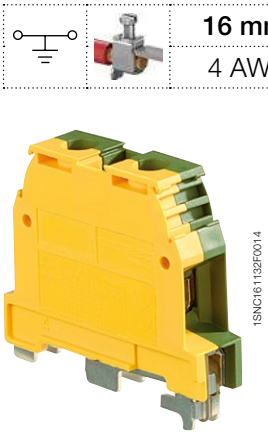


M16/12.P

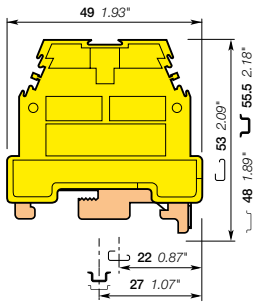


**12 mm** 0.472 in spacing

| | | |
|---|---|---|
| | | **16 mm²** |
| | | 4 AWG |

### Description

- Reliable electrical and mechanical contact with the rail,
- Flexibility: snap onto symmetrical and asymmetrical rails.

### Ordering details

| Description | | Color | Type | Part Number | | Pkg qty | Weight (1 pce) g |
|---|---|---|---|---|---|---|---|
| **Ground** | Screw rail connection | Green-yellow | M16/12.P | 1SNA165130R2300 | | 20 | 40.00 |

### Main technical data

| Connecting capacity | | IEC | UL | CSA |
|---|---|---|---|---|
| **1 conductor per clamp** | Rigid - Solid / Stranded | 2.5-25 mm² | 14-4 AWG | 10-6 AWG |
| | Flexible | 2.5-16 mm² | | |
| | with insulated ferrule | | | |
| | Gauge | B7 | | |
| **Rated cross section** | | 16 mm² | 4 AWG | 6 AWG |
| **Rated short-time withstand current** (1s) | | 1920 A | | |

### Mounting instructions

| | |
|---|---|
| Rail | G32, TH 35-7.5, TH 35-15 |
| Wire stripping length | 14 mm<br>0.55 in |
| Screw clamp Tool | Flat screwdriver<br>Ø 5.5 mm<br>Ø 0.22 in |
| Torque | 1.2 - 1.4 N.m<br>10.6 - 12.4 lb.in |
| Rail connection screw Tool | Flat screwdriver<br>Ø 5.5 mm<br>Ø 0.22 in |
| Torque | 1 N.m<br>9 lb.in |

The connecting capacity data for one Rigid - Solid / Stranded - Flexible conductor (when applicable) is a mandatory information required by IEC, UL and CSA standards.
All other data are provided as supplementary information only. For more details, please consult our CB, UL or CSA certificates and technical datasheet available on http://www.te.com

CE RoHS USR CSA Gost R

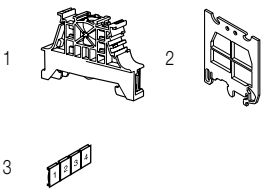


### Accessories

| | Description | | | Color | Type | Part Number | | Pkg qty | Weight (1 pce) g |
|---|---|---|---|---|---|---|---|---|---|
| 1 | **End stops** | 10 mm | 0.394 in | Grey | BAM4 | 1SNK900001R0000 | | 50 | 12.00 |
| | | 9 mm | 0.354 in | | BAZ1 | 1SNK900002R0000 | | 50 | 4.70 |
| 2 | **Circuit separators** | 3 mm | 0.118 in | Grey | SCFM6 | 1SNA114825R0500 | | 20 | 4.00 |
| 3 | **Terminal block markers** | Blank card | | White | RC810 | 1SNA234000R0200 | | 10 | 8.20 |
| | | | | | RC1010 | 1SNA238000R1600 | | 10 | 1.30 |

Complete list of accessories is indicated in the terminal block datasheet.
Some accessories such as jumper bars may modify the terminal block's ratings: complete information in the accessories catalogue pages.

Technical data valid for copper conductors only.

# M35/16.P screw clamp terminal blocks

## Ground - 16 mm 0.630 in spacing

35 mm²
0 AWG

M35/16.P

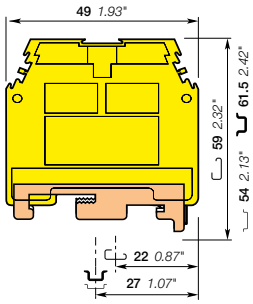


**16 mm** 0.630 in spacing

### Description

- Reliable electrical and mechanical contact with the rail,
- Flexibility: snap onto symmetrical and asymmetrical rails.

### Ordering details

| Description | | Color | Type | Part Number | | Pkg qty | Weight (1 pce) g |
|---|---|---|---|---|---|---|---|
| **Ground** | Screw rail connection | Green-yellow | M35/16.P | 1SNA165111R1400 | | 20 | 50.50 |

### Main technical data

| Connecting capacity | | IEC | UL | CSA |
|---|---|---|---|---|
| **1 conductor per clamp** | Rigid - Solid / Stranded | 6-50 mm² | 8-0 AWG | 6-4 AWG |
| | Flexible | 6-35 mm² | | |
| | with insulated ferrule | | | |
| | Gauge | B9 | | |
| **Rated cross section** | | 35 mm² | 0 AWG | 4 AWG |
| **Rated short-time withstand current** (1s) | | 4200 A | | |

### Mounting instructions

| | |
|---|---|
| Rail | G32, TH 35-7.5, TH 35-15 |
| Wire stripping length | 17 mm<br>0.67 in |
| Screw clamp Tool | Flat screwdriver<br>Ø 8 mm<br>Ø 0.32 in |
| Torque | 2.8 - 3 N.m<br>24.9 - 26.7 lb.in |
| Rail connection screw Tool | Flat screwdriver<br>Ø 5.5 mm<br>Ø 0.22 in |
| Torque | 2.8 - 3 N.m<br>24.9 - 26.7 lb.in |

The connecting capacity data for one Rigid - Solid / Stranded - Flexible conductor (when applicable) is a mandatory information required by IEC, UL and CSA standards.
All other data are provided as supplementary information only. For more details, please consult our CB, UL or CSA certificates and technical datasheet available on http://www.te.com

CE RoHS USR CSA Gost R

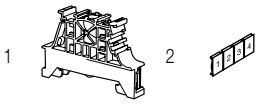

### Accessories

| | Description | | | Color | Type | Part Number | | Pkg qty | Weight (1 pce) g |
|---|---|---|---|---|---|---|---|---|---|
| 1 | **End stops** | 10 mm | 0.394 in | Grey | BAM4 | 1SNK900001R0000 | | 50 | 12.00 |
| | | 9 mm | 0.354 in | | BAZ1 | 1SNK900002R0000 | | 50 | 4.70 |
| 2 | **Terminal block markers** | Blank card | | White | RC810 | 1SNA234000R0200 | | 10 | 8.20 |
| | | | | | RC1010 | 1SNA238000R1600 | | 10 | 1.30 |

Complete list of accessories is indicated in the terminal block datasheet.
Some accessories such as jumper bars may modify the terminal block's ratings: complete information in the accessories catalogue pages.

Technical data valid for copper conductors only.

# D70/22.P screw clamp terminal blocks
## Ground - 22 mm 0.866 in spacing

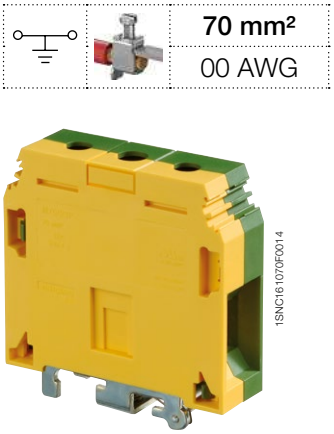


D70/22.P

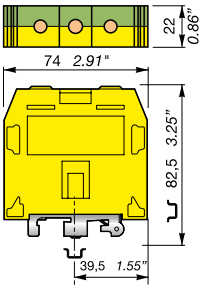


**22 mm** 0.866 in spacing

| | |
|---|---|
| | **70 mm²** |
| | 00 AWG |

### Description

Reliable electrical and mechanical contact with the rail.

### Ordering details

| Description | | Color | Type | Part Number | | Pkg qty | Weight (1 pce) g |
|---|---|---|---|---|---|---|---|
| **Ground** | Screw rail connection | Green-yellow | D70/22.P | 1SNA400772R1300 | | 10 | 222.00 |

### Main technical data

| Connecting capacity | | IEC | UL | CSA |
|---|---|---|---|---|
| **1 conductor per clamp** | Rigid - Solid / Stranded | 16-95 mm² | 4-00 AWG | 4-00 AWG |
| | Flexible | 16-70 mm² | | |
| | with insulated ferrule | | | |
| | Gauge | B11 | | |
| **Rated cross section** | | 70 mm² | 00 AWG | 00 AWG |
| **Rated short-time withstand current** (1s) | | 8400 A | 8088 A | 8088 A |

### Mounting instructions

| | |
|---|---|
| Rail | TH 35-15 |
| Wire stripping length | 25 mm<br>0.984 in |
| Screw clamp Tool | Allen key<br>Ø 6 mm<br>Ø 0.236 in |
| Torque | 6 - 7 N.m<br>53.4 - 62.3 lb.in |
| Rail connection screw Tool | Allen key<br>Ø 4 mm<br>Ø 0.158 in |
| Torque | 1.8 - 2 N.m<br>15.9 - 17.7 lb.in |

The connecting capacity data for one Rigid - Solid / Stranded - Flexible conductor (when applicable) is a mandatory information required by IEC, UL and CSA standards.
All other data are provided as supplementary information only. For more details, please consult our CB, UL or CSA certificates and technical datasheet available on http://www.te.com

CE RoHS USR CNR CSA Gost R

### Accessories

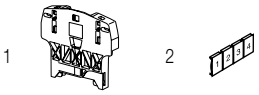


| | Description | | | Color | Type | Part Number | | Pkg qty | Weight (1 pce) g |
|---|---|---|---|---|---|---|---|---|---|
| 1 | **End stops** | 12 mm | 0.472 in | Grey | BAZH1 | 1SNK900102R0000 | | 50 | 24.00 |
| 2 | **Terminal block markers** Blank card | | | White | RC1010 | 1SNA238000R1600 | | 1 | 1.30 |

Complete list of accessories is indicated in the terminal block datasheet.
Some accessories such as jumper bars may modify the terminal block's ratings: complete information in the accessories catalogue pages.

Technical data valid for copper conductors only.



1SNC161012S0201 - Rev. C

# D95/26.P screw clamp terminal blocks
## Ground - 26 mm 1.024 in spacing

**95 mm²**
0000 AWG

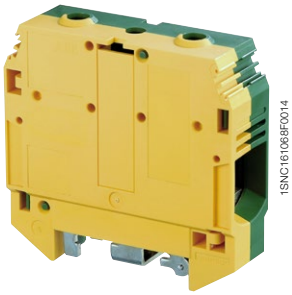


D95/26.P

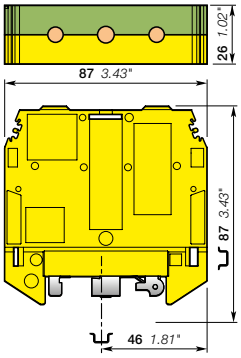


**26 mm** 1.024 in spacing

## Description

Reliable electrical and mechanical contact with the rail.

## Ordering details

| Description | | Color | Type | Part Number | | Pkg qty | Weight (1 pce) g |
|---|---|---|---|---|---|---|---|
| **Ground** | Screw rail connection | Green-yellow | D95/26.P | 1SNA400620R1700 | | 10 | 278.00 |

## Main technical data

| Connecting capacity | | IEC | UL | CSA |
|---|---|---|---|---|
| **1 conductor per clamp** | Rigid - Solid / Stranded | 35-120 mm² | 2-0000 AWG | 2-0000 AWG |
| | Flexible with insulated ferrule | 35-95 mm² | | |
| | Gauge | B12 | | |
| **Rated cross section** | | 95 mm² | 0000 AWG | 0000 AWG |
| **Rated short-time withstand current** (1s) | | 11400 A | 12840 A | 12840 A |

## Mounting instructions

| | | |
|---|---|---|
| Rail | | TH 35-15 |
| Wire stripping length | | 26 mm<br>1.023 in |
| Screw clamp Tool | | Allen key<br>Ø 6 mm<br>Ø 0.236 in |
| Torque | | 9 - 9.5 N.m<br>79.5 - 83.9 lb.in |
| Rail connection screw Tool | | Allen key<br>Ø 4 mm<br>Ø 0.158 in |
| Torque | | 1.8 - 2 N.m<br>15.9 - 17.7 lb.in |

The connecting capacity data for one Rigid - Solid / Stranded - Flexible conductor (when applicable) is a mandatory information required by IEC, UL and CSA standards.
All other data are provided as supplementary information only. For more details, please consult our CB, UL or CSA certificates and technical datasheet available on http://www.te.com

CE RoHS USR CNR CSA Gost R

## Accessories

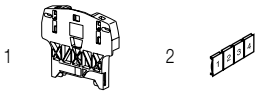

| | Description | | | Color | Type | Part Number | | Pkg qty | Weight (1 pce) g |
|---|---|---|---|---|---|---|---|---|---|
| 1 | **End stops** | 12 mm | 0.472 in | Grey | BAZH1 | 1SNK900102R0000 | | 50 | 24.00 |
| 2 | **Terminal block markers** Blank card | | | White | RC1010 | 1SNA238000R1600 | | 1 | 1.30 |

Complete list of accessories is indicated in the terminal block datasheet.
Some accessories such as jumper bars may modify the terminal block's ratings: complete information in the accessories catalogue pages.

Technical data valid for copper conductors only.

# MA2.5/5.D2 screw clamp terminal blocks

## Double deck - 5 mm 0.197 in spacing

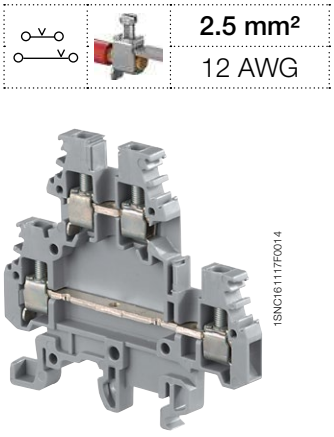

2.5 mm²
12 AWG




MA2.5/5.D2

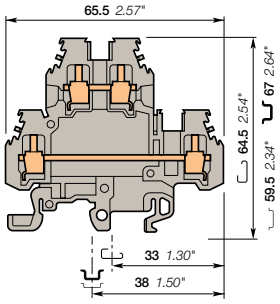


**5 mm** 0.197 in spacing

### Description

- Save space with double deck terminal blocks: 2 independent circuits connected in just 5 mm 0.197 in spacing,
- Flexibility: snap onto symmetrical and asymmetrical rails.

### Ordering details

| Description | | Color | Type | Part Number | | Pkg qty | Weight (1 pce) g |
|---|---|---|---|---|---|---|---|
| **Feed-through** | 2 feed-through circuits | Grey | MA2.5/5.D2 | 1SNA115490R1300 | | 50 | 15.00 |
| | | Blue | MA2.5/5.D2.N | 1SNA125490R1500 | | 50 | 15.00 |
| | | Beige | MA2.5/5.D2 | 1SNA195490R1400 | | 50 | 15.00 |

### Main technical data

| Connecting capacity | | IEC | UL | CSA |
|---|---|---|---|---|
| **1 conductor per clamp** | Rigid - Solid / Stranded | 0.2-4 mm² | 22-12 AWG | 20-12 AWG |
| | Flexible | 0.22-2.5 mm² | | |
| | with insulated ferrule | | | |
| | Gauge | A3 | | |
| **Rated current / Rated cross section** | | 24 A / 2.5 mm² | 20 A / 12 AWG | 25 A / 12 AWG |
| **Rated short-time withstand current** (1s) | | 300 A | | |
| **Rated voltage** | | 630 V | 300 V | 300 V |
| **Impulse withstand voltage** | | 8000 V | | |
| **Protection** | | IP20 | NEMA 1 | |

### Mounting instructions

| | |
|---|---|
| Rail | G32, TH 35-7.5, TH 35-15 |
| Wire stripping length | 9 mm<br>0.354 in |
| Tool | Flat screwdriver<br>Ø 3.5 mm<br>Ø 0.138 in |
| Torque | 0.4 - 0.6 N.m<br>3.5 - 5.3 lb.in |

The connecting capacity data for one Rigid - Solid / Stranded - Flexible conductor (when applicable) is a mandatory information required by IEC, UL and CSA standards.
All other data are provided as supplementary information only. For more details, please consult our CB, UL or CSA certificates and technical datasheet available on http://www.te.com

CE RoHS USR CSA Gost R

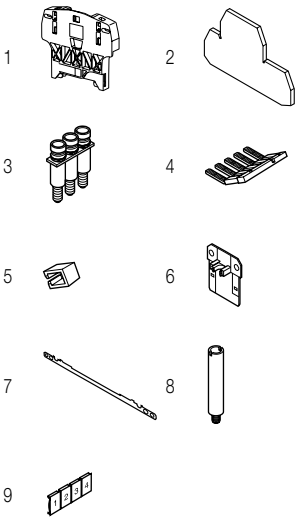


### Accessories

| | Description | | | Color | Type | Part Number | | Pkg qty | Weight (1 pce) g |
|---|---|---|---|---|---|---|---|---|---|
| 1 | **End stops** | 12 mm | 0.472 in | Grey | BAZH1 | 1SNK900102R0000 | | 50 | 24.00 |
| 2 | **End sections** | 1 mm | 0.039 in | Grey | FEM6D | 1SNA118499R2300 | | 20 | 2.70 |
| 3 | **Jumper bars** | 2 poles | 24 A | | BJMI5D-2 | 1SNA176736R2100 | | 10 | 2.00 |
| | | 3 poles | | | BJMI5D-3 | 1SNA176737R2200 | | 10 | 3.00 |
| | | 4 poles | | | BJMI5D-4 | 1SNA176738R0300 | | 10 | 4.00 |
| | | 5 poles | | | BJMI5D-5 | 1SNA176739R0400 | | 10 | 6.00 |
| | | 10 poles | | | BJMI5D-10 | 1SNA176740R1100 | | 10 | 12.00 |
| 4 | **Lateral jumper bars** | 2 poles | 30 A | Grey | PC5-2 | 1SNA113542R1000 | | 10 | 1.80 |
| | | 10 poles | | | PC5-10 | 1SNA113544R1200 | | 10 | 6.00 |
| 5 | **Insulating tips** | For lateral jumper bars type PC... | | | EIP | 1SNA113550R2400 | | 10 | |
| 6 | **Circuit separators** | 0 mm | 0 in | Grey | SCMA5D | 1SNA116720R2100 | | 10 | |
| 7 | **Shield connectors** | | | | CBM5D | 1SNA173530R2400 | | 50 | |
| 8 | **Inner deck jumper bars** | | | | ITV5 | 1SNA176259R1300 | | 20 | 2.00 |
| 9 | **Terminal block markers** | Blank card | | White | RC510 | 1SNA231000R0700 | | 10 | 5.20 |

Complete list of accessories is indicated in the terminal block datasheet.
Some accessories such as jumper bars may modify the terminal block's ratings: complete information in the accessories catalogue pages.

Technical data valid for copper conductors only.

1SNC161033S0201 - Rev. B

2.5 mm²
12 AWG

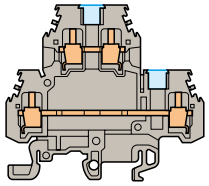

**5 mm** 0.197 in Spacing

1
2

## With partition

### Ordering Details

| Description | | Color | Type | Part Number | | Pkg qty | Weight (1 pce) g |
|---|---|---|---|---|---|---|---|
| **Feed-through** | 2 Feed-through circuits with partition | Grey | MA2.5/5.D2.1 | 1SNA115491R0000 | | 50 | 15.00 |

| Main Technical Data | IEC | UL | CSA | Nota |
|---|---|---|---|---|
| Rated voltage | 630 V | 300 V | 300 V | |
| Impulse withstand voltage | 8000 V | | | |
| Protection | IP20 | NEMA 1 | | |

CE RoHS USR CSA Gost R

### Accessories

| | Description | | Color | Type | Part Number | | Pkg qty | Weight (1 pce) g |
|---|---|---|---|---|---|---|---|---|
| 1 | **Test Sockets** | DIA 2 mm 0.079 in | | AL2 | 1SNA164950R0000 | | 50 | |
| 2 | **Test Plugs** | DIA 2 mm 0.079 in | Black | FC2 | 1SNA007865R2600 | | 100 | |

2.5 mm²
12 AWG

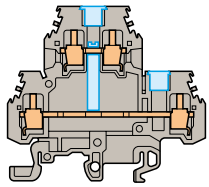

**5 mm** 0.197 in Spacing

1
2

## With vertical interconnection and partition

### Ordering Details

| Description | | Color | Type | Part Number | | Pkg qty | Weight (1 pce) g |
|---|---|---|---|---|---|---|---|
| **Feed-through** | 1 Feed-through circuit with vertical interconnection and partition | Grey | MA2.5/5.D1.1 | 1SNA115530R1200 | | 50 | 15.00 |

| Main Technical Data | IEC | UL | CSA | Nota |
|---|---|---|---|---|
| Rated voltage | 630 V | | 300 V | |
| Impulse withstand voltage | 8000 V | | | |
| Protection | IP20 | NEMA 1 | | |

CE RoHS CSA Gost R

### Accessories

| | Description | | Color | Type | Part Number | | Pkg qty | Weight (1 pce) g |
|---|---|---|---|---|---|---|---|---|
| 1 | **Test Sockets** | DIA 2 mm 0.079 in | | AL2 | 1SNA164950R0000 | | 50 | |
| 2 | **Test Plugs** | DIA 2 mm 0.079 in | Black | FC2 | 1SNA007865R2600 | | 100 | |

Technical data valid for copper conductors only.



1SNC161099S0201 - Rev. A

# M4/6.D2 screw clamp terminal blocks
## Double deck - 6 mm 0.236 in spacing

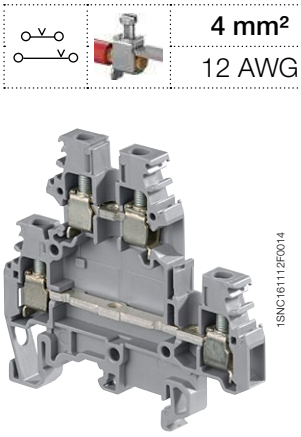


M4/6.D2

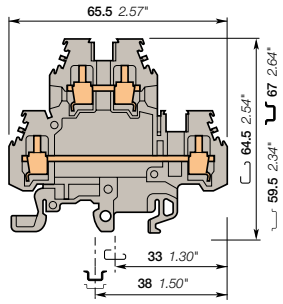


**6 mm** 0.236 in spacing

| | |
|---|---|
| | **4 mm²** |
| | 12 AWG |

### Description

- Save space with double deck terminal blocks: 2 independent circuits connected in just 6 mm 0.236 in spacing,
- Flexibility: snap onto symmetrical and asymmetrical rails.

### Ordering details

| Description | Color | Type | Part Number | | Pkg qty | Weight (1 pce) g |
|---|---|---|---|---|---|---|
| **Feed-through** 2 feed-through circuits | Grey | M4/6.D2 | 1SNA115271R2200 | | 50 | 20.00 |
| | Blue | M4/6.D2.N | 1SNA125271R2400 | | 50 | 20.00 |
| | Orange | M4/6.D2 | 1SNA105049R0600 | | 50 | 20.00 |
| | Yellow | M4/6.D2 | 1SNA105045R2200 | | 50 | 20.00 |
| | Green | M4/6.D2 | 1SNA105044R2100 | | 50 | 20.00 |
| | Red | M4/6.D2 | 1SNA105048R0500 | | 50 | 20.00 |
| | White | M4/6.D2 | 1SNA105046R2300 | | 50 | 20.00 |
| | Black | M4/6.D2 | 1SNA105047R2400 | | 50 | 20.00 |
| | Beige | M4/6.D2 | 1SNA195271R2300 | | 50 | 20.00 |

### Main technical data

| Connecting capacity | | IEC | UL | CSA |
|---|---|---|---|---|
| **1 conductor per clamp** | Rigid - Solid / Stranded | 0.2-4 mm² | 22-12 AWG | 24-10 AWG |
| | Flexible | 0.22-4 mm² | | |
| | with insulated ferrule | | | |
| | Gauge | A4 | | |
| **Rated current / Rated cross section** | | 32 A / 4 mm² | 20 A / 12 AWG | 25 A / 10 AWG |
| **Rated short-time withstand current** (1s) | | 480 A | | |
| **Rated voltage** | | 800 V | 300 V | 600 V |
| **Impulse withstand voltage** | | 8000 V | | |
| **Protection** | | IP20 | NEMA 1 | |

### Mounting instructions

| | |
|---|---|
| Rail | G32, TH 35-7.5, TH 35-15 |
| Wire stripping length | 8.5 mm<br>0.33 in |
| Tool | Flat screwdriver<br>Ø 4 mm<br>Ø 0.157 in |
| Torque | 0.5 - 0.8 N.m<br>4.4 - 7.1 lb.in |

The connecting capacity data for one Rigid - Solid / Stranded - Flexible conductor (when applicable) is a mandatory information required by IEC, UL and CSA standards.
All other data are provided as supplementary information only. For more details, please consult our CB, UL or CSA certificates and technical datasheet available on http://www.te.com

CE RoHS USR CSA Gost R

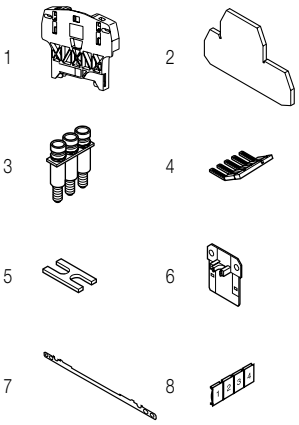


### Accessories

| | Description | | | Color | Type | Part Number | | Pkg qty | Weight (1 pce) g |
|---|---|---|---|---|---|---|---|---|---|
| 1 | **End stops** | 12 mm | 0.472 in | Grey | BAZH1 | 1SNK900102R0000 | | 50 | 24.00 |
| 2 | **End sections** | 1 mm | 0.039 in | Grey | FEM6D | 1SNA118499R2300 | | 20 | 2.70 |
| 3 | **Jumper bars** | 2 poles | 32 A | | BJMI6D-2 | 1SNA179668R2000 | | 10 | 4.00 |
| | | 3 poles | | | BJMI6D-3 | 1SNA179669R2100 | | 10 | 6.00 |
| | | 4 poles | | | BJMI6D-4 | 1SNA179670R2600 | | 10 | 8.00 |
| | | 5 poles | | | BJMI6D-5 | 1SNA179671R1300 | | 10 | 10.00 |
| | | 10 poles | | | BJMI6D-10 | 1SNA179672R1400 | | 10 | 20.00 |
| 4 | **Lateral jumper bars** | 10 poles | 35 A | | PC61-10 | 1SNA163311R2200 | | 10 | 5.00 |
| 5 | **Cross spacing jumpers** | 5 mm 0.200 in - 6 mm 0.236 in - 8 mm 0.315 in | | | EL6 | 1SNA173627R2100 | | 10 | 0.10 |
| 6 | **Circuit separators** | 0 mm | 0 in | Grey | SCM6D | 1SNA113482R0500 | | 10 | 0.30 |
| | | 1 mm | 0.039 in | | SCF6D | 1SNA118495R1700 | | 20 | |
| 7 | **Shield connectors** | | | | CBM5D | 1SNA173530R2400 | | 50 | |
| 8 | **Terminal block markers** | Blank card | | White | RC610 | 1SNA233000R0100 | | 1 | 7.50 |

Complete list of accessories is indicated in the terminal block datasheet.
Some accessories such as jumper bars may modify the terminal block's ratings: complete information in the accessories catalogue pages.

Technical data valid for copper conductors only.

1SNC161028S0201 - Rev. B

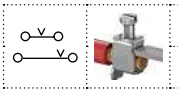

**4 mm²**
12 AWG

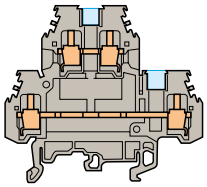

**6 mm** 0.236 in spacing

1

2

## With partition

### Ordering details

| Description | | Color | Type | Part Number | | Pkg qty | Weight (1 pce) g |
|---|---|---|---|---|---|---|---|
| **Feed-through** | 2 feed-through circuits with partition | Grey | M4/6.D2.1 | 1SNA115126R0100 | | 50 | 20.00 |
| | | Blue | M4/6.D2.1.N | 1SNA125126R0300 | | 50 | 20.00 |

| Main technical data | IEC | UL | CSA |
|---|---|---|---|
| Rated voltage | 800 V | 300 V | 600 V |
| Impulse withstand voltage | 8000 V | | |
| Protection | IP20 | NEMA 1 | |

CE RoHS USR CSA Gost R

### Accessories

| | Description | | Color | Type | Part Number | | Pkg qty | Weight (1 pce) g |
|---|---|---|---|---|---|---|---|---|
| 1 | **Test sockets** | DIA 2 mm 0.079 in | | AL2 | 1SNA163070R0000 | | 50 | |
| | | DIA 3 mm 0.120 in | | AL3 | 1SNA163261R0000 | | 50 | 1.20 |
| 2 | **Test plugs** | DIA 2 mm 0.079 in | Black | FC2 | 1SNA007865R2600 | | 100 | |



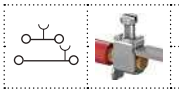

**4 mm²**
10 AWG

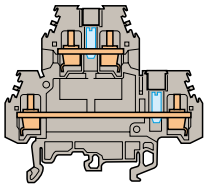

**6 mm** 0.236 in spacing

1

## With test socket DIA 2 mm 0.079 in

### Ordering details

| Description | | Color | Type | Part Number | | Pkg qty | Weight (1 pce) g |
|---|---|---|---|---|---|---|---|
| **Feed-through** | 2 feed-through circuits with 2 tests sockets DIA 2 mm 0.079 in | Grey | M4/6.D2.2 | 1SNA115322R1500 | | 50 | 20.00 |

| Main technical data | IEC | UL | CSA |
|---|---|---|---|
| Rated voltage | 630 V | | 600 V |
| Impulse withstand voltage | 8000 V | | |
| Protection | IP10 | NEMA | |

CE RoHS CSA Gost R

### Accessories

| | Description | | Color | Type | Part Number | | Pkg qty | Weight (1 pce) g |
|---|---|---|---|---|---|---|---|---|
| 1 | **Test plugs** | DIA 2 mm 0.079 in | Black | FC2 | 1SNA007865R2600 | | 100 | |

Technical data valid for copper conductors only.

1SNC161100S0201 - Rev. A

# M4/6.D1 screw clamp terminal blocks
## Double deck - 6 mm 0.236 in spacing

**4 mm²**
10 AWG

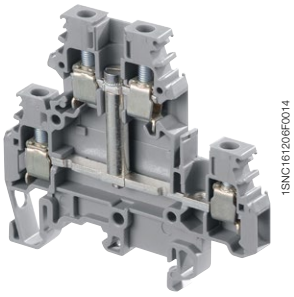


M4/6.D1

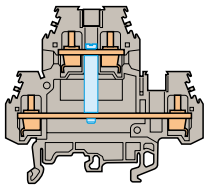

**6 mm** 0.236 in spacing

### Description

- Ease one potential distribution on 4 independent screw clamps,
- Flexibility: snap onto symmetrical and asymmetrical rails.

### Ordering details

| Description | | Color | Type | Part Number | | Pkg qty | Weight (1 pce) g |
|---|---|---|---|---|---|---|---|
| **Feed-through** | 1 feed-through circuit | Grey | M4/6.D1.1 | 1SNA115204R2000 | | 50 | 20.00 |
| | | Blue | M4/6.D1.1N | 1SNA125204R2200 | | 50 | 20.00 |

### Main technical data

| Connecting capacity | | IEC | UL | CSA |
|---|---|---|---|---|
| **1 conductor per clamp** | Rigid - Solid / Stranded | 0.2-4 mm² | | 24-10 AWG |
| | Flexible | 0.22-4 mm² | | |
| | with insulated ferrule | | | |
| | Gauge | A4 | | |
| **Rated current / Rated cross section** | | 32 A / 4 mm² | | 25 A / 10 AWG |
| **Rated short-time withstand current** (1s) | | 480 A | | |
| **Rated voltage** | | 800 V | | 600 V |
| **Impulse withstand voltage** | | 8000 V | | |
| **Protection** | | IP20 | NEMA 1 | |

The connecting capacity data for one Rigid - Solid / Stranded - Flexible conductor (when applicable) is a mandatory information required by IEC, UL and CSA standards.
All other data are provided as supplementary information only. For more details, please consult our CB, UL or CSA certificates and technical datasheet available on http://www.te.com

CE RoHS CSA Gost R

### Mounting instructions

| | | |
|---|---|---|
| Rail | | G32, TH 35-7.5, TH 35-15 |
| Wire stripping length | | 8.5 mm<br>0.33 in |
| Tool | | Flat screwdriver<br>Ø 4 mm<br>Ø 0.16 in |
| Torque | | 0.5 - 0.8 N.m<br>4.4 - 7.1 lb.in |

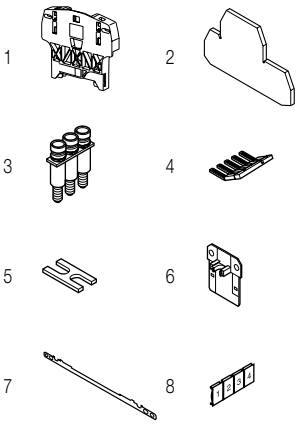


### Accessories

| | Description | | | Color | Type | Part Number | | Pkg qty | Weight (1 pce) g |
|---|---|---|---|---|---|---|---|---|---|
| 1 | **End stops** | 12 mm | 0.472 in | Grey | BAZH1 | 1SNK900102R0000 | | 50 | 24.00 |
| 2 | **End sections** | 1 mm | 0.039 in | Grey | FEM6D | 1SNA118499R2300 | | 20 | 2.70 |
| 3 | **Jumper bars** | 2 poles | 32 A | | BJMI6D-2 | 1SNA179668R2000 | | 10 | 4.00 |
| | | 3 poles | | | BJMI6D-3 | 1SNA179669R2100 | | 10 | 6.00 |
| | | 4 poles | | | BJMI6D-4 | 1SNA179670R2600 | | 10 | 8.00 |
| | | 5 poles | | | BJMI6D-5 | 1SNA179671R1300 | | 10 | 10.00 |
| | | 10 poles | | | BJMI6D-10 | 1SNA179672R1400 | | 10 | 20.00 |
| 4 | **Lateral jumper bars** | 10 poles | 35 A | | PC61-10 | 1SNA163311R2200 | | 10 | 5.00 |
| 5 | **Cross spacing jumpers** | 5 mm 0.200 in - 6 mm 0.236 in - 8 mm 0.315 in | | | EL6 | 1SNA173627R2100 | | 10 | 0.10 |
| 6 | **Circuit separators** | 0 mm | 0 in | Grey | SCM6D | 1SNA113482R0500 | | 10 | 0.30 |
| | | 1 mm | 0.039 in | | SCF6D | 1SNA118495R1700 | | 20 | |
| 7 | **Shield connectors** | | | | CBM5D | 1SNA173530R2400 | | 50 | |
| 8 | **Terminal block markers** | Blank card | | White | RC610 | 1SNA233000R0100 | | 1 | 7.50 |

Complete list of accessories is indicated in the terminal block datasheet.
Some accessories such as jumper bars may modify the terminal block's ratings: complete information in the accessories catalogue pages.

Technical data valid for copper conductors only.

1SNC161040S0201 - Rev. B

| 4 mm² |
|---|
| 10 AWG |

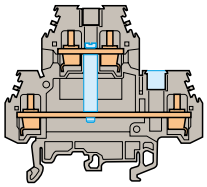

**6 mm** 0.236 in spacing

1

2

## With vertical interconnection and partition

### Ordering details

| Description | | Color | Type | Part Number | | Pkg qty | Weight (1 pce) g |
|---|---|---|---|---|---|---|---|
| **Feed-through** | 1 feed-through circuit with vertical interconnection and partition | Grey | M4/6.D1 | 1SNA115166R1100 | | 50 | 20.00 |
| | | Blue | M4/6.D1.N | 1SNA125166R1300 | | 50 | 20.00 |

| Main technical data | IEC | UL | CSA | Nota |
|---|---|---|---|---|
| Rated voltage | 800 V | | 600 V | |
| Impulse withstand voltage | 8000 V | | | |
| Protection | IP20 | NEMA 1 | | |

CE RoHS CSA Gost R

### Accessories

| | Description | | Color | Type | Part Number | | Pkg qty | Weight (1 pce) g |
|---|---|---|---|---|---|---|---|---|
| 1 | **Test sockets** | DIA 2 mm 0.079 in | | AL2 | 1SNA163070R0000 | | 50 | |
| | | DIA 3 mm 0.120 in | | AL3 | 1SNA163261R0000 | | 50 | 1.20 |
| 2 | **Test plugs** | DIA 2 mm 0.079 in | Black | FC2 | 1SNA007865R2600 | | 100 | |

Technical data valid for copper conductors only.



1SNC161101S0201 - Rev. A

# M6/8.D screw clamp terminal blocks

## Double deck - 8 mm 0.315 in spacing

**6 mm²**

8 AWG

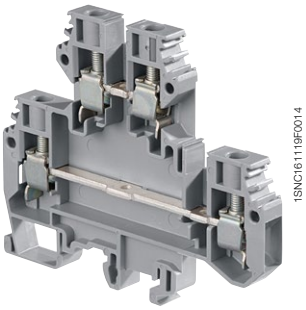


M6/8.D

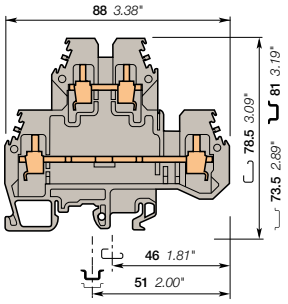


**8 mm** 0.315 in spacing

### Description

- Save space with double deck terminal blocks: 2 independent circuits,
- Flexibility: snap onto symmetrical and asymmetrical rails.

### Ordering details

| Description | | Color | Type | Part Number | | Pkg qty | Weight (1 pce) g |
|---|---|---|---|---|---|---|---|
| **Feed-through** | 2 feed-through circuits | Grey | M6/8.D2 | 1SNA115501R1200 | | 50 | 33.00 |
| | | Beige | M6/8.D2 | 1SNA195501R1300 | | 50 | 33.00 |

### Main technical data

| Connecting capacity | | IEC | UL | CSA |
|---|---|---|---|---|
| **1 conductor per clamp** | Rigid - Solid / Stranded | 0.5-10 mm² | 18-8 AWG | 8 AWG |
| | Flexible | 0.5-6 mm² | | |
| | with insulated ferrule | | | |
| | Gauge | A5 | | |
| **Rated current / Rated cross section** | | 41 A / 6 mm² | 50 A / 8 AWG | 45 A / 8 AWG |
| **Rated short-time withstand current** (1s) | | 720 A | | |
| **Rated voltage** | | 800 V | 600 V | 600 V |
| **Impulse withstand voltage** | | 8000 V | | |
| **Protection** | | IP20 | NEMA 1 | |

### Mounting instructions

| | |
|---|---|
| Rail | G32, TH 35-7.5, TH 35-15 |
| Wire stripping length | 12 mm<br>0.47 in |
| Tool | Flat screwdriver<br>Ø 4 - 5 mm<br>Ø 0.157 - 0.197 in |
| Torque | 0.8 - 1 N.m<br>7.1 - 8.9 lb.in |

The connecting capacity data for one Rigid - Solid / Stranded - Flexible conductor (when applicable) is a mandatory information required by IEC, UL and CSA standards.
All other data are provided as supplementary information only. For more details, please consult our CB, UL or CSA certificates and technical datasheet available on http://www.te.com

CE RoHS USR CSA Gost R

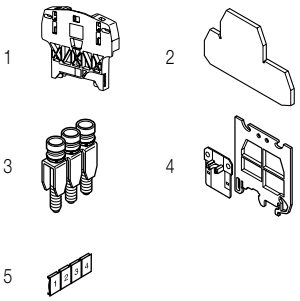


### Accessories

| | Description | | | Color | Type | Part Number | | Pkg qty | Weight (1 pce) g |
|---|---|---|---|---|---|---|---|---|---|
| 1 | **End stops** | 12 mm | 0.472 in | Grey | BAZH1 | 1SNK900102R0000 | | 50 | 24.00 |
| 2 | **End sections** | 1 mm | 0.039 in | Grey | FEM8D1 | 1SNA116656R2500 | | 20 | 10.00 |
| 3 | **Jumper bars** | 2 poles | 41 A | | BJMI8-2 | 1SNA176669R1600 | | 10 | 4.50 |
| | | 3 poles | | | BJMI8-3 | 1SNA176670R1300 | | 10 | 6.00 |
| | | 4 poles | | | BJMI8-4 | 1SNA176671R0000 | | 10 | 10.00 |
| | | 5 poles | | | BJMI8-5 | 1SNA176672R0100 | | 10 | 12.22 |
| | | 10 poles | | | BJMI8-10 | 1SNA176673R0200 | | 10 | 20.00 |
| 4 | **Circuit separators** | 0 mm | 0 in | Grey | SCM6 | 1SNA113003R1000 | | 10 | 0.30 |
| 5 | **Terminal block markers** | Blank card | | White | RC810 | 1SNA234000R0200 | | 1 | 8.20 |

Complete list of accessories is indicated in the terminal block datasheet.
Some accessories such as jumper bars may modify the terminal block's ratings: complete information in the accessories catalogue pages.

Technical data valid for copper conductors only.

1SNC161043S0201 - Rev. B

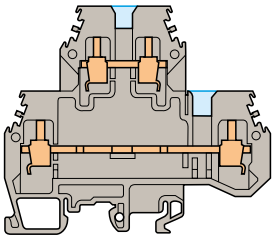

**8 mm** 0.315 in spacing

1 2

## With partition

### Ordering details

| Description | | Color | Type | Part Number | | Pkg qty | Weight (1 pce) g |
|---|---|---|---|---|---|---|---|
| **Feed-through** | 2 feed-through circuits with partition | Grey | M6/8.D2.1 | 1SNA115497R0600 | | 50 | 33.00 |

| Main technical data | IEC | UL | CSA | Nota |
|---|---|---|---|---|
| Rated voltage | 800 V | 600 V | 600 V | |
| Impulse withstand voltage | 8000 V | | | |
| Protection | IP20 | NEMA 1 | | |

CE RoHS USR CSA Gost R

### Accessories

| | Description | | Color | Type | Part Number | | Pkg qty | Weight (1 pce) g |
|---|---|---|---|---|---|---|---|---|
| 1 | **Test sockets** | DIA 2 mm 0.079 in | | AL2 | 1SNA163043R2100 | | 50 | 0.90 |
| | | DIA 3 mm 0.120 in | | AL3 | 1SNA163261R0000 | | 50 | 1.20 |
| 2 | **Test plugs** | DIA 2 mm 0.079 in | Black | FC2 | 1SNA007865R2600 | | 100 | |
| | | DIA 4 mm 0.157 in | White | FC4 | 1SNA167860R0100 | | 10 | |

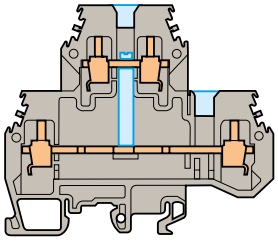

**8 mm** 0.315 in spacing

1 2

## With vertical interconnection and partition

### Ordering details

| Description | | Color | Type | Part Number | | Pkg qty | Weight (1 pce) g |
|---|---|---|---|---|---|---|---|
| **Feed-through** | 1 feed-through circuit with vertical interconnection and partition | Grey | M6/8.D1 | 1SNA115498R1700 | | 50 | 36.00 |

| Main technical data | IEC | UL | CSA | Nota |
|---|---|---|---|---|
| Rated voltage | 800 V | 600 V | 600 V | |
| Impulse withstand voltage | 8000 V | | | |
| Protection | IP20 | NEMA 1 | | |

CE RoHS USR CSA Gost R

### Accessories

| | Description | | Color | Type | Part Number | | Pkg qty | Weight (1 pce) g |
|---|---|---|---|---|---|---|---|---|
| 1 | **Test sockets** | DIA 2 mm 0.079 in | | AL2 | 1SNA163043R2100 | | 50 | 0.90 |
| | | DIA 3 mm 0.120 in | | AL3 | 1SNA163261R0000 | | 50 | 1.20 |
| 2 | **Test plugs** | DIA 2 mm 0.079 in | Black | FC2 | 1SNA007865R2600 | | 100 | |
| | | DIA 4 mm 0.157 in | White | FC4 | 1SNA167860R0100 | | 10 | |

Technical data valid for copper conductors only.

1SNC161102S0201 - Rev. A

# D2.5/6.DP screw clamp terminal blocks

## Double deck + ground - 6 mm 0.236 in spacing

**2.5 mm²**
12 AWG

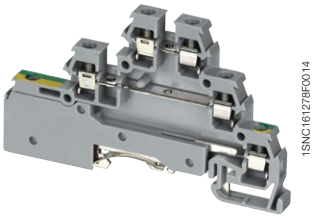


D2.5/6.DP

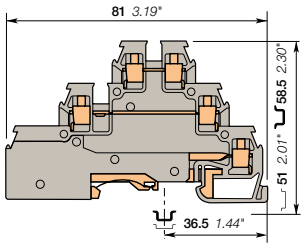

**6 mm** 0.236 in spacing

### Description

- Save space with triple deck terminal blocks: 2 independent circuits in just 6 mm 0.236 in spacing,
- Adapted for 2 wires sensor/actuator with ground.

### Ordering details

| Description | | Color | Type | Part Number | | Pkg qty | Weight (1 pce) g |
|---|---|---|---|---|---|---|---|
| **Feed-through + ground** | For 2 wires sensor with ground - 2 feed-through circuits - 1 ground circuit | Grey, Green-Yellow | D2.5/6.DPA1 | 1SNA115643R2700 | | 25 | 16.00 |

### Main technical data

| Connecting capacity | | IEC | UL | CSA |
|---|---|---|---|---|
| **1 conductor per clamp** | Rigid - Solid / Stranded | 0.2-2.5 mm² | 20-12 AWG | 22-14 AWG |
| | Flexible | 0.22-2.5 mm² | | |
| | with insulated ferrule | | | |
| | Gauge | A2 | | |
| | | | | |
| | | | | |
| **Rated current / Rated cross section** | | 22 A / 2.5 mm² | 26 A / 12 AWG | 20 A / 14 AWG |
| **Rated short-time withstand current** (1s) | | 300 A | | |
| **Rated voltage** | | 380 V | 300 V | 300 V |
| **Impulse withstand voltage** | | | | |
| **Protection** | | IP20 | NEMA 1 | |

### Mounting instructions

| | | |
|---|---|---|
| Rail | | G32, TH 35-7.5, TH 35-15 |
| Wire stripping length | | 6 mm<br>0.24 in |
| Tool | | Flat screwdriver<br>Ø 3.5 mm<br>Ø 0.138 in |
| Torque | | 0.4 - 0.6 N.m<br>3.5 - 5.3 lb.in |

The connecting capacity data for one Rigid - Solid / Stranded - Flexible conductor (when applicable) is a mandatory information required by IEC, UL and CSA standards.
All other data are provided as supplementary information only. For more details, please consult our CB, UL or CSA certificates and technical datasheet available on http://www.te.com

CE RoHS USR CSA Gost R

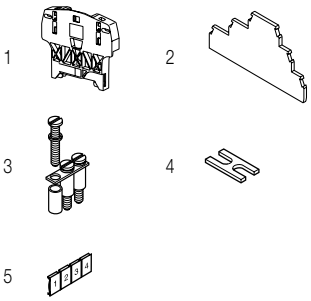


### Accessories

| | Description | | | Color | Type | Part Number | | Pkg qty | Weight (1 pce) g |
|---|---|---|---|---|---|---|---|---|---|
| 1 | **End stops** | 12 mm | 0.472 in | Grey | BAZH1 | 1SNK900102R0000 | | 50 | 24.00 |
| 2 | **End sections** | 3 mm | 0.118 in | Grey | FED3E | 1SNA116771R2000 | | 20 | 3.80 |
| 3 | **Jumper bars** | 2 poles | 22 A | | BJD6 | 1SNA178024R2500 | | 10 | 1.00 |
| | | 3 poles | | | | 1SNA178025R2600 | | 10 | 2.00 |
| | | 4 poles | | | | 1SNA178026R2700 | | 10 | 2.00 |
| | | 5 poles | | | | 1SNA178027R2000 | | 10 | 3.00 |
| | | 10 poles | | | | 1SNA178032R2500 | | 10 | 6.00 |
| | | 20 poles | | | | 1SNA178033R2600 | | 5 | 12.00 |
| 4 | **Cross spacing jumpers** | 5 mm 0.200 in - 6 mm 0.236 in - 8 mm 0.315 in | | | EL61 | 1SNA177812R1700 | | 10 | 0.10 |
| 5 | **Terminal block markers** | Blank card | | White | RC65 | 1SNA232000R0000 | | 1 | 3.60 |

Complete list of accessories is indicated in the terminal block datasheet.
Some accessories such as jumper bars may modify the terminal block's ratings: complete information in the accessories catalogue pages.

Technical data valid for copper conductors only.

1SNC161091S0201 - Rev. B

# D2.5/6.DA screw clamp terminal blocks
## Triple deck - 6 mm 0.236 in spacing

**2.5 mm²**
12 AWG

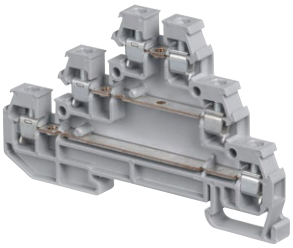


D2.5/6.DA

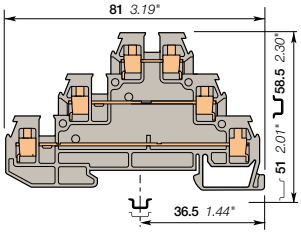


**6 mm** 0.236 in spacing

### Description

- Save space with triple deck terminal blocks: 3 independent circuits connected in just 6 mm 0.236 in spacing,
- Adapted for 3 wires sensor/actuator.

### Ordering details

| Description | | Color | Type | Part Number | | Pkg qty | Weight (1 pce) g |
|---|---|---|---|---|---|---|---|
| **Feed-through** | For 3 wires sensor - 3 feed-through circuits | Grey | D2.5/6.DA | 1SNA115541R1100 | | 25 | 13.00 |

### Main technical data

| Connecting capacity | | IEC | UL | CSA |
|---|---|---|---|---|
| **1 conductor per clamp** | Rigid - Solid / Stranded | 0.2-2.5 mm² | 20-12 AWG | 22-14 AWG |
| | Flexible | 0.22-2.5 mm² | | |
| | with insulated ferrule | | | |
| | Gauge | A2 | | |
| **Rated current / Rated cross section** | | 22 A / 2.5 mm² | 26 A / 12 AWG | 20 A / 14 AWG |
| **Rated short-time withstand current** (1s) | | 300 A | | |
| **Rated voltage** | | 380 V | 300 V | 300 V |
| **Impulse withstand voltage** | | | | |
| **Protection** | | IP20 | NEMA 1 | |

### Mounting instructions

| | |
|---|---|
| Rail | G32, TH 35-7.5, TH 35-15 |
| Wire stripping length | 6 mm 0.24 in |
| Tool | Flat screwdriver Ø 3.5 mm Ø 0.138 in |
| Torque | 0.4 - 0.6 N.m 3.5 - 5.3 lb.in |

The connecting capacity data for one Rigid - Solid / Stranded - Flexible conductor (when applicable) is a mandatory information required by IEC, UL and CSA standards.
All other data are provided as supplementary information only. for more details, please consult our CB, UL or CSA certificates and technical datasheet available on http://www.te.com

CE RoHS USR CSA Gost R

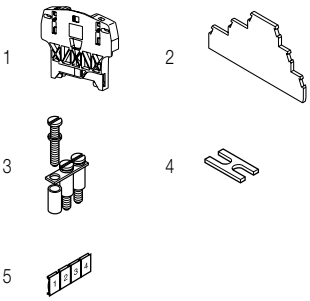


### Accessories

| | Description | | | Color | Type | Part Number | | Pkg qty | Weight (1 pce) g |
|---|---|---|---|---|---|---|---|---|---|
| 1 | **End stops** | 12 mm | 0.472 in | Grey | BAZH1 | 1SNK900102R0000 | | 50 | 24.00 |
| 2 | **End sections** | 3 mm | 0.118 in | Grey | FED3E | 1SNA116771R2000 | | 20 | 3.80 |
| 3 | **Jumper bars** | 2 poles | 22 A | | BJD6 | 1SNA178024R2500 | | 10 | 1.00 |
| | | 3 poles | | | | 1SNA178025R2600 | | 10 | 2.00 |
| | | 4 poles | | | | 1SNA178026R2700 | | 10 | 2.00 |
| | | 5 poles | | | | 1SNA178027R2000 | | 10 | 3.00 |
| | | 10 poles | | | | 1SNA178032R2500 | | 10 | 6.00 |
| | | 20 poles | | | | 1SNA178033R2600 | | 5 | 12.00 |
| 4 | **Cross spacing jumpers** | 5 mm 0.200 in - 6 mm 0.236 in - 8 mm 0.315 in | | | EL61 | 1SNA177812R1700 | | 10 | 0.10 |
| 5 | **Terminal block markers** | Blank card | | White | RC65 | 1SNA232000R0000 | | 1 | 3.60 |

Complete list of accessories is indicated in the terminal block datasheet.
Some accessories such as jumper bars may modify the terminal block's ratings: complete information in the accessories catalogue pages.

Technical data valid for copper conductors only.

1SNC161084S0201 - Rev. B

# D4/6.T screw clamp terminal blocks
## Triple deck - 6 mm 0.236 in spacing

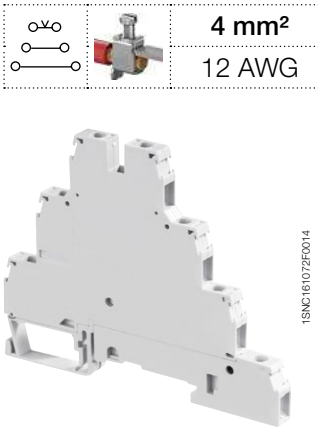


D4/6.T

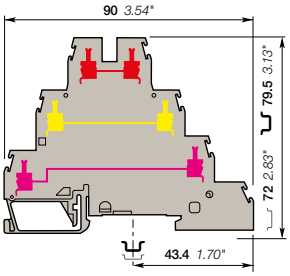


**6 mm** 0.236 in spacing

**4 mm²**
12 AWG

### Description

Save space with triple deck terminal blocks: 3 independent circuits connected in just 6 mm 0.236 in spacing;
– closed terminal block: no end section needed, optimized rigidity.

### Ordering details

| Description | | Color | Type | Part Number | | Pkg qty | Weight (1 pce) g |
|---|---|---|---|---|---|---|---|
| **Feed-through** | 3 feed-through circuits | Grey | D4/6.T3 | 1SNA299683R0100 | | 25 | 27.00 |

### Main technical data

| Connecting capacity | | IEC | UL | CSA |
|---|---|---|---|---|
| **1 conductor per clamp** | Rigid - Solid / Stranded | 0.2-4 mm² | 22-12 AWG | |
| | Flexible | 0.22-4 mm² | | |
| | with insulated ferrule | | | |
| | Gauge | A4 | | |
| **Rated current / Rated cross section** | | 32 A / 4 mm² | 20 A / 12 AWG | |
| **Rated short-time withstand current** (1s) | | 480 A | | |
| **Rated voltage** | | 500 V | 300 V | |
| **Impulse withstand voltage** | | 6000 V | | |
| **Protection** | | IP20 | NEMA 1 | |

### Mounting instructions

| | |
|---|---|
| Rail | G32, TH 35-7.5, TH 35-15 |
| Wire stripping length | 9.5 mm<br>0.37 in |
| Tool | Flat screwdriver<br>Ø 4 mm<br>Ø 0.16 in |
| Torque | 0.5 - 0.8 N.m<br>4.4 - 7.1 lb.in |

The connecting capacity data for one Rigid - Solid / Stranded - Flexible conductor (when applicable) is a mandatory information required by IEC, UL and CSA standards.
All other data are provided as supplementary information only. for more details, please consult our CB, UL or CSA certificates and technical datasheet available on http://www.te.com

CE | RoHS | USR CNR | Gost R

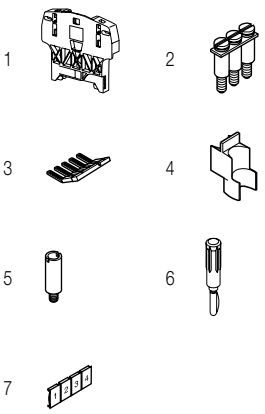


### Accessories

| | Description | | | Color | Type | Part Number | | Pkg qty | Weight (1 pce) g |
|---|---|---|---|---|---|---|---|---|---|
| 1 | **End stops** | 12 mm | 0.472 in | Grey | BAZH1 | 1SNK900102R0000 | | 50 | 24.00 |
| 2 | **Jumper bars** | 2 poles | 32 A | | BJM62 | 1SNA173217R2600 | | 10 | 2.00 |
| | | 3 poles | | | | 1SNA173218R0700 | | 10 | 3.00 |
| | | 4 poles | | | | 1SNA173219R0000 | | 10 | 4.00 |
| | | 5 poles | | | | 1SNA173221R2200 | | 10 | 5.00 |
| | | 10 poles | | | | 1SNA173226R2700 | | 10 | 10.00 |
| 3 | **Lateral jumper bars** | 10 poles | 35 A | | PC61-10 | 1SNA163311R2200 | | 10 | 5.00 |
| 4 | **Circuit separators** | 1.5 mm | 0.059 in | White | SCD | 1SNA103189R2600 | | 10 | 1.00 |
| 5 | **Test sockets** | DIA 2 mm | 0.079 in | | AL2 | 1SNA167319R0600 | | 50 | |
| 6 | **Test plugs** | DIA 2 mm | 0.079 in | Black | FC2 | 1SNA007865R2600 | | 100 | |
| 7 | **Terminal block markers** | Blank card | | White | RC65 | 1SNA232000R0000 | | 1 | 3.60 |

Complete list of accessories is indicated in the terminal block datasheet.
Some accessories such as jumper bars may modify the terminal block's ratings: complete information in the accessories catalogue pages.

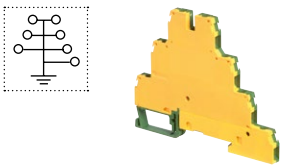

### Ground screw clamp terminal blocks

| Description | | Color | Type | Part Number | | Pkg qty | Weight (1 pce) g |
|---|---|---|---|---|---|---|---|
| **Ground** | Profile aligned with D4/6.T3... | Green-yellow | D4/6.P.T1 | 1SNA199220R0000 | | 25 | |

Technical data valid for copper conductors only.

4 mm²
12 AWG

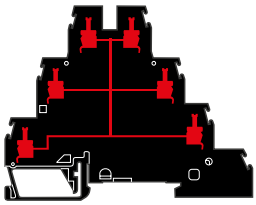

**6 mm** 0.236 in spacing

1

## 1 feed-through circuit

### Ordering details

| Description | | Color | Type | Part Number | | Pkg qty | Weight (1 pce) g |
|---|---|---|---|---|---|---|---|
| **Feed-through** | 1 feed-through circuit | Black | D4/6.T1 | 1SNA199219R0300 | | 25 | 29.00 |

| Main technical data | IEC | UL | CSA |
|---|---|---|---|
| Rated voltage | 500 V | 300 V | |
| Impulse withstand voltage | 6000 V | | |
| Protection | IP20 | NEMA 1 | |

Can not be fitted with accessories : test sockets, test plugs and jumper bars BJM62

CE RoHS USR CNR Gost R

### Accessories

| | Description | | | Color | Type | Part Number | | Pkg qty | Weight (1 pce) g |
|---|---|---|---|---|---|---|---|---|---|
| 1 | **Jumper bars** | 1 poles | 24 A | Grey | AD2.5 | 1SNA114205R2000 | | 50 | 1.60 |

4 mm²
12 AWG

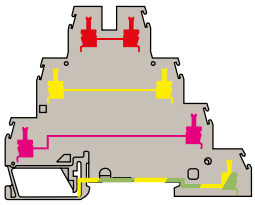

**6 mm** 0.236 in spacing

## With ground, 3 feed-through circuit

### Ordering details

| Description | | Color | Type | Part Number | | Pkg qty | Weight (1 pce) g |
|---|---|---|---|---|---|---|---|
| **Feed-through + ground** | 3 feed-through circuits + 1 ground | Grey, Green-Yellow | D4/6.T3.P | 1SNA299684R0200 | | 25 | 30.00 |

| Main technical data | IEC | UL | CSA |
|---|---|---|---|
| Rated voltage | 500 V | 300 V | |
| Impulse withstand voltage | 6000 V | | |
| Protection | IP20 | NEMA 1 | |

Nota

CE RoHS USR CNR Gost R

Technical data valid for copper conductors only.

1SNC161103S0201 - Rev.B

# D4/6.P.T1 screw clamp terminal blocks
## Ground - 6 mm 0.236 in spacing

**4 mm²**
12 AWG

**D4/6.P.T1**

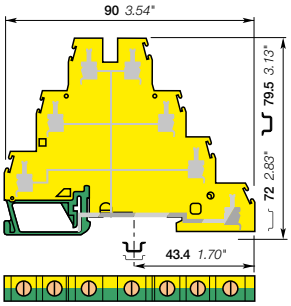


**6 mm** 0.236 in spacing

### Description

- Reliable electrical and mechanical contact with rail,
- Ease ground distribution on 7 independent screw clamps.

### Ordering details

| Description | | Color | Type | Part Number | | Pkg qty | Weight (1 pce) g |
|---|---|---|---|---|---|---|---|
| **Ground** | Screwless rail connection | Green-yellow | D4/6.P.T1 | 1SNA199220R0000 | | 25 | |

### Main technical data

| Connecting capacity | | IEC | UL | CSA |
|---|---|---|---|---|
| **1 conductor per clamp** | Rigid - Solid / Stranded | 0.2-4 mm² | 22-12 AWG | |
| | Flexible | 0.22-4 mm² | | |
| | with insulated ferrule | | | |
| | Gauge | A4 | | |
| **Rated cross section** | | 4 mm² | 12 AWG | |
| **Rated short-time withstand current** (1s) | | 480 A | | |

### Mounting instructions

| | |
|---|---|
| Rail | G32, TH 35-7.5, TH 35-15 |
| Wire stripping length | 9.5 mm<br>0.37 in |
| Screw clamp Tool | Flat screwdriver<br>Ø 4 mm<br>Ø 0.16 in |
| Torque | 0.5 - 0.8 N.m<br>4.4 - 7.1 lb.in |

The connecting capacity data for one Rigid - Solid / Stranded - Flexible conductor (when applicable) is a mandatory information required by IEC, UL and CSA standards.
All other data are provided as supplementary information only. For more details, please consult our CB, UL or CSA certificates and technical datasheet available on http://www.te.com

CE | RoHS | USR CNR | Gost R

1 2 3 4

### Accessories

| | Description | | | Color | Type | Part Number | | Pkg qty | Weight (1 pce) g |
|---|---|---|---|---|---|---|---|---|---|
| 1 | **End stops** | 12 mm | 0.472 in | Grey | BAZH1 | 1SNK900102R0000 | | 50 | 24.00 |
| 2 | **Jumper bars** | 1 poles | 24 A | Grey | AD2.5 | 1SNA114205R2000 | | 50 | 1.60 |
| 3 | **Lateral jumper bars** | 10 poles | 35 A | | PC61-10 | 1SNA163311R2200 | | 10 | 5.00 |
| 4 | **Terminal block markers** | Blank card | | White | RC65 | 1SNA232000R0000 | | 1 | 3.60 |

Complete list of accessories is indicated in the terminal block datasheet.
Some accessories such as jumper bars may modify the terminal block's ratings: complete information in the accessories catalogue pages.

Technical data valid for copper conductors only.

1SNC161007S0201 - Rev. B

# MA2.5/5.SNB screw clamp terminal blocks

## Disconnect with blade - 5 mm 0.197 in spacing

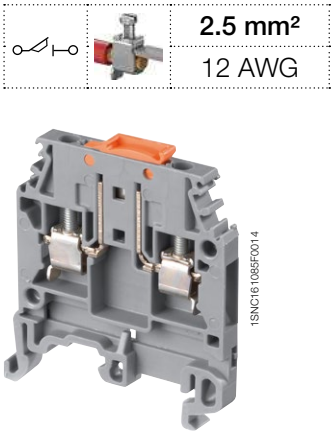


MA2.5/5.SNB

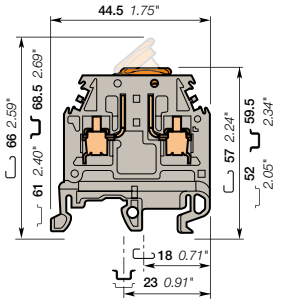


**5 mm** 0.197 in spacing

| | |
|---|---|
| | **2.5 mm²** |
| | 12 AWG |

### Description

- Ease your disconnect operations with the disconnect blade operated by hand or with screwdriver,
- Same profile as MA2.5/5 feed-through terminal block for aligned marking and identical end section use.

### Ordering details

| Description | Color | Type | Part Number | | Pkg qty | Weight (1 pce) g |
|---|---|---|---|---|---|---|
| Disconnect | Grey-orange | MA2.5/5.SNB | 1SNA115699R2000 | | 50 | 8.00 |

### Main technical data

| Connecting capacity | | IEC | UL | CSA |
|---|---|---|---|---|
| **1 conductor per clamp** | Rigid - Solid / Stranded | 0.5-4 mm² | | 28-12 AWG |
| | Flexible | 0.5-2.5 mm² | | |
| | with insulated ferrule | | | |
| | Gauge | A3 | | |
| **Rated current / Rated cross section** | | 10 A / 2.5 mm² | | 15 A / 12 AWG |
| **Rated short-time withstand current** (1s) | | 120 A | | |
| **Rated voltage** | | 320 V | | 600 V |
| **Impulse withstand voltage** | | 4000 V | | |
| **Protection** | | IP20 | NEMA 1 | |

The connecting capacity data for one Rigid - Solid / Stranded - Flexible conductor (when applicable) is a mandatory information required by IEC, UL and CSA standards.
All other data are provided as supplementary information only. For more details, please consult our CB, UL or CSA certificates and technical datasheet available on http://www.te.com

CE | RoHS | cCSAus | Gost R

### Mounting instructions

| | |
|---|---|
| Rail | G32, TH 35-7.5, TH 35-15 |
| Wire stripping length | 10 mm<br>0.39 in |
| Tool | Flat screwdriver<br>Ø 3.5 mm<br>Ø 0.138 in |
| Torque | 0.4 - 0.6 N.m<br>3.5 - 5.3 lb.in |

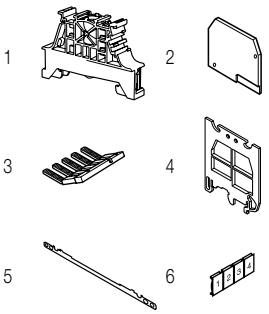


### Accessories

| | Description | | | Color | Type | Part Number | | Pkg qty | Weight (1 pce) g |
|---|---|---|---|---|---|---|---|---|---|
| 1 | **End stops** | 10 mm | 0.394 in | Grey | BAM4 | 1SNK900001R0000 | | 50 | 12.00 |
| | | 9 mm | 0.354 in | | BAZ1 | 1SNK900002R0000 | | 50 | 4.70 |
| 2 | **End sections** | 2.8 mm | 0.110 in | Grey | FEM6 | 1SNA118368R1600 | | 20 | 2.40 |
| 3 | **Lateral jumper bars** | 2 poles | 30 A | Grey | PC5-2 | 1SNA113542R1000 | | 10 | 1.80 |
| | | 10 poles | | | PC5-10 | 1SNA113544R1200 | | 10 | 6.00 |
| 4 | **Circuit separators** | 3 mm | 0.118 in | Grey | SCFM6 | 1SNA114825R0500 | | 20 | 4.00 |
| | | | | | SCF6 | 1SNA118707R0300 | | 20 | |
| 5 | **Shield connectors** | | | | CBM5 | 1SNA178745R1400 | | 50 | |
| 6 | **Terminal block markers** | Blank card | | White | RC510 | 1SNA231000R0700 | | 1 | 5.20 |

Complete list of accessories is indicated in the terminal block datasheet.
Some accessories such as jumper bars may modify the terminal block's ratings: complete information in the accessories catalogue pages.

Technical data valid for copper conductors only.

# MA2.5/5.SNBT screw clamp terminal blocks

## Disconnect with blade - with test socket - 5 mm 0.197 in spacing

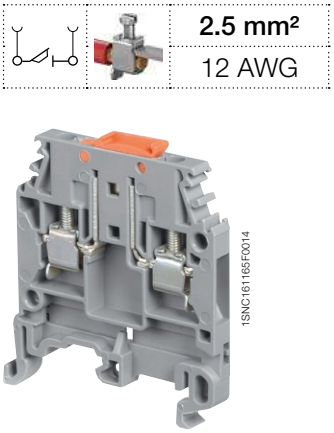


| | |
|---|---|
| 2.5 mm² | |
| 12 AWG | |

MA2.5/5.SNBT

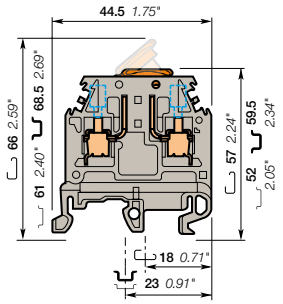


**5 mm** 0.197 in spacing

### Description

- Ease your test operations with the two built-in test socket,
- Ease your disconnect operations with the disconnect blade operated by hand or with screwdriver,
- Same profile as MA2.5/5 feed-through terminal block for aligned marking and identical end section use.

### Ordering details

| Description | | Color | Type | Part Number | | Pkg qty | Weight (1 pce) g |
|---|---|---|---|---|---|---|---|
| **Disconnect** | With 2 tests sockets DIA 2 mm 0.079 in | Grey-orange | MA2.5/5.SNBT | 1SNA115700R0500 | | 50 | 11.00 |
| | With 2 tests sockets DIA 2.3 mm 0.091 in | Grey-orange | MA2.5/5.SNBT | 1SNA115701R2200 | | 50 | 11.00 |
| | | Grey-grey | MA2.5/5.SNBTA | 1SNA115505R1600 | | 50 | 11.00 |
| | | Blue-grey | MA2.5/5.SNBTA | 1SNA125505R1000 | | 50 | 11.00 |

### Main technical data

| Connecting capacity | | IEC | UL | CSA |
|---|---|---|---|---|
| **1 conductor per clamp** | Rigid - Solid / Stranded | 0.5-4 mm² | | 28-12 AWG |
| | Flexible | 0.5-2.5 mm² | | |
| | with insulated ferrule | | | |
| | Gauge | A3 | | |
| | | | | |
| | | | | |
| **Rated current / Rated cross section** | | 10 A / 2.5 mm² | | 15 A / 12 AWG |
| **Rated short-time withstand current** (1s) | | 120 A | | |
| **Rated voltage** | | 320 V | | 600 V |
| **Impulse withstand voltage** | | 4000 V | | |
| **Protection** | | IP10 | NEMA | |

### Mounting instructions

| | |
|---|---|
| Rail | G32, TH 35-7.5, TH 35-15 |
| Wire stripping length | 10 mm 0.39 in |
| Tool | Flat screwdriver Ø 3.5 mm Ø 0.138 in |
| Torque | 0.4 - 0.6 N.m 3.5 - 5.3 lb.in |

The connecting capacity data for one Rigid - Solid / Stranded - Flexible conductor (when applicable) is a mandatory information required by IEC, UL and CSA standards.
All other data are provided as supplementary information only. For more details, please consult our CB, UL or CSA certificates and technical datasheet available on http://www.te.com

CE | RoHS | cCSAus | Gost R

### Accessories

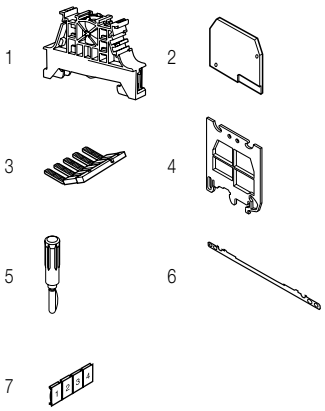


| | Description | | | Color | Type | Part Number | | Pkg qty | Weight (1 pce) g |
|---|---|---|---|---|---|---|---|---|---|
| 1 | **End stops** | 10 mm | 0.394 in | Grey | BAM4 | 1SNK900001R0000 | | 50 | 12.00 |
| | | 9 mm | 0.354 in | | BAZ1 | 1SNK900002R0000 | | 50 | 4.70 |
| 2 | **End sections** | 2.8 mm | 0.110 in | Grey | FEM6 | 1SNA118368R1600 | | 20 | 2.40 |
| 3 | **Lateral jumper bars** | 2 poles | 30 A | Grey | PC5-2 | 1SNA113542R1000 | | 10 | 1.80 |
| | | 10 poles | | | PC5-10 | 1SNA113544R1200 | | 10 | 6.00 |
| 4 | **Circuit separators** | 3 mm | 0.118 in | Grey | SCFM6 | 1SNA114825R0500 | | 20 | 4.00 |
| | | | | | SCF6 | 1SNA118707R0300 | | 20 | |
| 5 | **Test plugs** | DIA 2 mm 0.079 in | | Black | FC2 | 1SNA007865R2600 | | 100 | |
| 6 | **Shield connectors** | | | | CBM5 | 1SNA178745R1400 | | 50 | |
| 7 | **Terminal block markers** | Blank card | | White | RC510 | 1SNA231000R0700 | | 1 | 5.20 |

Complete list of accessories is indicated in the terminal block datasheet.
Some accessories such as jumper bars may modify the terminal block's ratings: complete information in the accessories catalogue pages.

Technical data valid for copper conductors only.

# M4/6.SNB screw clamp terminal blocks

## Disconnect with blade - 6 mm 0.236 in spacing

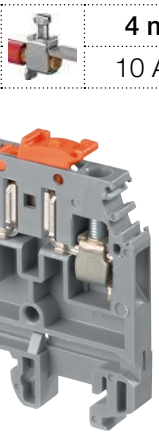

| | |
|---|---|
| 4 mm² | |
| 10 AWG | |




M4/6.SNB

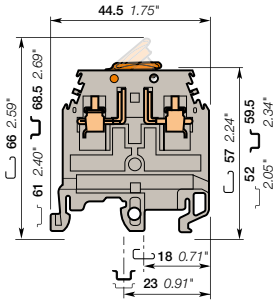


**6 mm** 0.236 in spacing

### Description

- Ease your disconnect operations with the disconnect blade operated by hand or with screwdriver,
- Same profile as M4/6 feed-through terminal block for aligned marking.

### Ordering details

| Description | Color | Type | Part Number | | Pkg qty | Weight (1 pce) g |
|---|---|---|---|---|---|---|
| Disconnect | Grey, Orange | M4/6.SNB | 1SNA115986R0000 | | 50 | 11.00 |
| | Orange, Orange | M4/6.SNB | 1SNA105053R2200 | | 50 | 11.00 |
| | Grey, Grey | M4/6.SNB | 1SNA115686R1300 | | 50 | 11.00 |
| | Beige, Grey | M4/6.SNB | 1SNA195686R1400 | | 50 | 11.00 |

### Main technical data

| Connecting capacity | | IEC | UL | CSA |
|---|---|---|---|---|
| 1 conductor per clamp | Rigid - Solid / Stranded | 0.5-4 mm² | 22-10 AWG | 24-10 AWG |
| | Flexible | 0.5-4 mm² | | |
| | with insulated ferrule | | | |
| | Gauge | A4 | | |
| Rated current / Rated cross section | | 20 A / 4 mm² | 10 A / 10 AWG | 15 A / 10 AWG |
| Rated short-time withstand current (1s) | | 300 A | | |
| Rated voltage | | 400 V | 300 V | 600 V |
| Impulse withstand voltage | | 4000 V | | |
| Protection | | IP20 | NEMA 1 | |

The connecting capacity data for one Rigid - Solid / Stranded - Flexible conductor (when applicable) is a mandatory information required by IEC, UL and CSA standards.
All other data are provided as supplementary information only. For more details, please consult our CB, UL or CSA certificates and technical datasheet available on http://www.te.com

CE RoHS USR cCSAus Gost R

### Mounting instructions

| | |
|---|---|
| Rail | G32, TH 35-7.5, TH 35-15 |
| Wire stripping length | 9.5 mm 0.37 in |
| Tool | Flat screwdriver Ø 4 mm Ø 0.16 in |
| Torque | 0.5 - 0.6 N.m 4.4 - 5.3 lb.in |

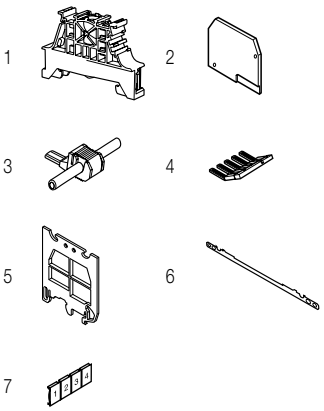


### Accessories

| | Description | | | Color | Type | Part Number | | Pkg qty | Weight (1 pce) g |
|---|---|---|---|---|---|---|---|---|---|
| 1 | End stops | 10 mm | 0.394 in | Grey | BAM4 | 1SNK900001R0000 | | 50 | 12.00 |
| | | 9 mm | 0.354 in | | BAZ1 | 1SNK900002R0000 | | 50 | 4.70 |
| 2 | End sections | 3 mm | 0.118 in | Grey | FEM62 | 1SNA114994R0700 | | 20 | 2.40 |
| 3 | Jumper bars | 1 poles | 24 A | Grey | AD2.5 | 1SNA114205R2000 | | 50 | 1.60 |
| 4 | Lateral jumper bars | 10 poles | 35 A | | PC61-10 | 1SNA163311R2200 | | 10 | 5.00 |
| 5 | Circuit separators | 3 mm | 0.118 in | Grey | SCFM6 | 1SNA114825R0500 | | 20 | 4.00 |
| 6 | Shield connectors | | | | CBM5 | 1SNA178745R1400 | | 50 | |
| 7 | Terminal block markers | Blank card | | White | RC610 | 1SNA233000R0100 | | 1 | 7.50 |

Complete list of accessories is indicated in the terminal block datasheet.
Some accessories such as jumper bars may modify the terminal block's ratings: complete information in the accessories catalogue pages.

Technical data valid for copper conductors only.

# M4/6.SNBT screw clamp terminal blocks

## Disconnect with blade - with test socket - 6 mm 0.236 in spacing

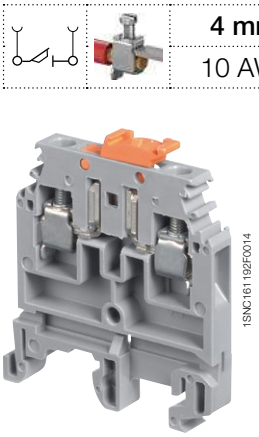


M4/6.SNBT

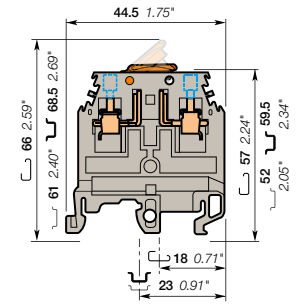


**6 mm** 0.236 in spacing

| 4 mm² |
|---|
| 10 AWG |

### Description

- Ease your test operations with the two built-in test sockets,
- Ease your disconnect operations with the disconnect blade operated by hand or with a screwdriver,
- Same profile as M4/6 feed-through terminal block for aligned marking.

### Ordering details

| Description | | Color | Type | Part Number | | Pkg qty | Weight (1 pce) g |
|---|---|---|---|---|---|---|---|
| **Disconnect** | With 2 tests sockets DIA 2 mm 0.079 in | Grey, orange | M4/6.SNBT | 1SNA115987R0100 | | 50 | 11.00 |
| | | Grey, grey | M4/6.SNBT | 1SNA115438R1200 | | 50 | 11.00 |
| | | Beige, grey | M4/6.SNBT | 1SNA195438R1300 | | 50 | 11.00 |
| | With 2 tests sockets DIA 2.3 mm 0.091 in | Grey, orange | M4/6.SNBT | 1SNA206538R0200 | | 50 | 11.00 |
| | | Beige, orange | M4/6.SNBT | 1SNA115495R0400 | | 50 | 11.00 |

### Main technical data

| Connecting capacity | | IEC | UL | CSA |
|---|---|---|---|---|
| **1 conductor per clamp** | Rigid - Solid / Stranded | 0.5-4 mm² | 22-10 AWG | 24-10 AWG |
| | Flexible | 0.5-4 mm² | | |
| | with insulated ferrule | | | |
| | Gauge | A4 | | |
| | | | | |
| | | | | |
| **Rated current / Rated cross section** | | 20 A / 4 mm² | 10 A / 10 AWG | 15 A / 10 AWG |
| **Rated short-time withstand current** (1s) | | 300 A | | |
| **Rated voltage** | | 400 V | 300 V | 600 V |
| **Impulse withstand voltage** | | 4000 V | | |
| **Protection** | | IP20 | NEMA 1 | |

The connecting capacity data for one Rigid - Solid / Stranded - Flexible conductor (when applicable) is a mandatory information required by IEC, UL and CSA standards.
All other data are provided as supplementary information only. For more details, please consult our CB, UL or CSA certificates and technical datasheet available on http://www.te.com

CE RoHS USR cCSAus Gost R

### Mounting instructions

| | | |
|---|---|---|
| Rail | | G32, TH 35-7.5, TH 35-15 |
| Wire stripping length | | 9.5 mm 0.374 in |
| Tool | | Flat screwdriver Ø 4 mm Ø 0.157 in |
| Torque | | 0.5 - 0.6 N.m 4.4 - 5.3 lb.in |



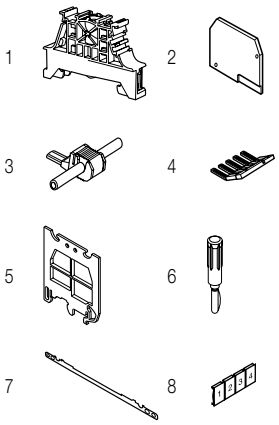


### Accessories

| | Description | | | Color | Type | Part Number | | Pkg qty | Weight (1 pce) g |
|---|---|---|---|---|---|---|---|---|---|
| 1 | **End stops** | 10 mm | 0.394 in | Grey | BAM4 | 1SNK900001R0000 | | 50 | 12.00 |
| | | 9 mm | 0.354 in | | BAZ1 | 1SNK900002R0000 | | 50 | 4.70 |
| 2 | **End sections** | 3 mm | 0.118 in | Grey | FEM62 | 1SNA114994R0700 | | 20 | 2.40 |
| 3 | **Jumper bars** | 1 poles | 24 A | Grey | AD2.5 | 1SNA114205R2000 | | 50 | 1.60 |
| 4 | **Lateral jumper bars** | 10 poles | 35 A | | PC61-10 | 1SNA163311R2200 | | 10 | 5.00 |
| 5 | **Circuit separators** | 3 mm | 0.118 in | Grey | SCFM6 | 1SNA114825R0500 | | 20 | 4.00 |
| 6 | **Test plugs** | DIA 2 mm 0.079 in | | Black | FC2 | 1SNA007865R2600 | | 100 | |
| 7 | **Shield connectors** | | | | CBM5 | 1SNA178745R1400 | | 50 | |
| 8 | **Terminal block markers** Blank card | | | White | RC610 | 1SNA233000R0100 | | 1 | 7.50 |

Complete list of accessories is indicated in the terminal block datasheet.
Some accessories such as jumper bars may modify the terminal block's ratings: complete information in the accessories catalogue pages.

Technical data valid for copper conductors only.

1SNC161058S0201 - Rev. B

# M6/8.SNB screw clamp terminal blocks

## Disconnect with blade - 8 mm 0.315 in spacing

6 mm²
8 AWG

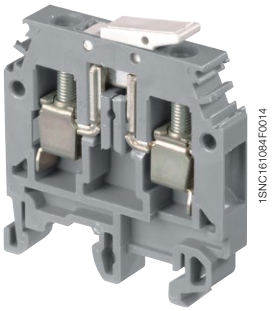


M6/8.SNB

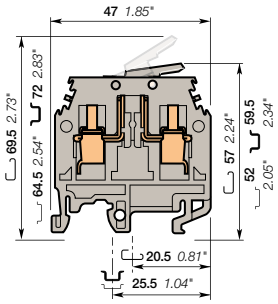


**8 mm** 0.315 in spacing

### Description

- Ease your disconnect operations with the disconnect blade operated by hand or with screwdriver,
- Same profile as M6/8 feed-through terminal block for aligned marking.

### Ordering details

| Description | Color | Type | Part Number | | Pkg qty | Weight (1 pce) g |
|---|---|---|---|---|---|---|
| Disconnect | Grey, Grey | M6/8.SNB | 1SNA115688R2500 | | 50 | 19.00 |
| | Orange, Orange | M6/8.SNB | 1SNA105055R2400 | | 50 | 19.00 |

### Main technical data

| Connecting capacity | | IEC | UL | CSA |
|---|---|---|---|---|
| 1 conductor per clamp | Rigid - Solid / Stranded | 0.5-10 mm² | 22-8 AWG | 22-8 AWG |
| | Flexible | 0.5-6 mm² | | |
| | with insulated ferrule | | | |
| | Gauge | A5 | | |
| Rated current / Rated cross section | | 15 A / 6 mm² | 20 A / 8 AWG | 20 A / 8 AWG |
| Rated short-time withstand current (1s) | | 180 A | | |
| Rated voltage | | 400 V | 300 V | 600 V |
| Impulse withstand voltage | | 4000 V | | |
| Protection | | IP20 | NEMA 1 | |

### Mounting instructions

| | |
|---|---|
| Rail | G32, TH 35-7.5, TH 35-15 |
| Wire stripping length | 12 mm<br>0.47 in |
| Tool | Flat screwdriver<br>Ø 4-5 mm<br>Ø 0.16-0.20 in |
| Torque | 0.8 - 1 N.m<br>7.1 - 8.9 lb.in |

The connecting capacity data for one Rigid - Solid / Stranded - Flexible conductor (when applicable) is a mandatory information required by IEC, UL and CSA standards.
All other data are provided as supplementary information only. For more details, please consult our CB, UL or CSA certificates and technical datasheet available on http://www.te.com

CE RoHS USR cCSAus Gost R

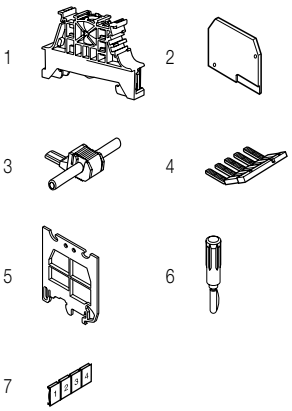


### Accessories

| | Description | | | Color | Type | Part Number | | Pkg qty | Weight (1 pce) g |
|---|---|---|---|---|---|---|---|---|---|
| 1 | End stops | 10 mm | 0.394 in | Grey | BAM4 | 1SNK900001R0000 | | 50 | 12.00 |
| | | 9 mm | 0.354 in | | BAZ1 | 1SNK900002R0000 | | 50 | 4.70 |
| 2 | End sections | 3 mm | 0.118 in | Grey | FEM8 | 1SNA113373R2600 | | 20 | 3.00 |
| 3 | Jumper bars | 1 poles | 24 A | Grey | AD2.5 | 1SNA114205R2000 | | 50 | 1.60 |
| 4 | Lateral jumper bars | 2 poles | 50 A | | PC8-2 | 1SNA116538R1700 | | 10 | 3.00 |
| | | 3 poles | | | PC8-3 | 1SNA116539R1000 | | 10 | 4.00 |
| | | 4 poles | | | PC8-4 | 1SNA116540R2500 | | 10 | 6.00 |
| | | 10 poles | | | PC8-10 | 1SNA163313R2400 | | 10 | |
| 5 | Circuit separators | 3 mm | 0.118 in | Grey | SCFM6 | 1SNA114825R0500 | | 20 | 4.00 |
| 6 | Test plugs | DIA 2 mm 0.079 in | | Black | FC2 | 1SNA007865R2600 | | 100 | |
| 7 | Terminal block markers | Blank card | | White | RC810 | 1SNA234000R0200 | | 1 | 8.20 |

Complete list of accessories is indicated in the terminal block datasheet.
Some accessories such as jumper bars may modify the terminal block's ratings: complete information in the accessories catalogue pages.

1SNC161059S0201 - Rev. B

Technical data valid for copper conductors only.

# M4/6.D2.SNBT screw clamp terminal blocks

## Disconnect with blade - with test socket - 6 mm 0.236 in spacing

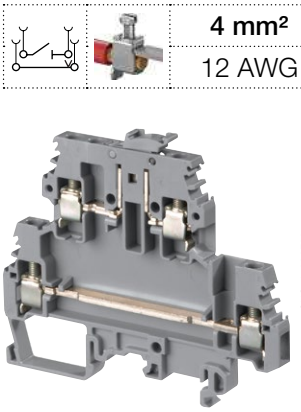


M4/6.D2.SNBT

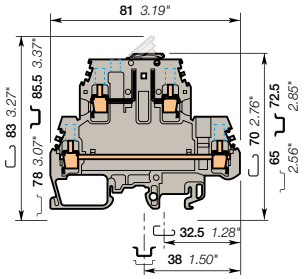


**6 mm** 0.236 in spacing

| | |
|---|---|
| | 4 mm² |
| | 12 AWG |

### Description

- Save space with double deck terminal blocks: 1 disconnect circuit on top + 1 independent feed-through circuit on bottom in just 6 mm 0.236 in spacing,
- Ease your disconnect operations with the disconnect blade operated by hand or with screwdriver,
- Same profile as M4/6.D2 feed-through terminal block for aligned marking and identical end section use.

### Ordering details

| Description | | Color | Type | Part Number | | Pkg qty | Weight (1 pce) g |
|---|---|---|---|---|---|---|---|
| **Disconnect** | With 4 tests sockets DIA 2 mm 0.079 in | Grey | M4/6.D2.SNBT | 1SNA115561R1500 | | 50 | 21.00 |

### Main technical data

| Connecting capacity | | IEC | UL | CSA |
|---|---|---|---|---|
| **1 conductor per clamp** | Rigid - Solid / Stranded | 0.5-4 mm² | 24-12 AWG | 24-10 AWG |
| | Flexible | 0.5-4 mm² | | |
| | with insulated ferrule | | | |
| | Gauge | A4 | | |
| **Rated current / Rated cross section** | | 10 A / 4 mm² | 20 A / 12 AWG | 15 A / 10 AWG |
| **Rated short-time withstand current** (1s) | | 120 A | | |
| **Rated voltage** | | 400 V | 300 V | 600 V |
| **Impulse withstand voltage** | | 4000 V | | |
| **Protection** | | IP20 | NEMA 1 | |

### Mounting instructions

| | |
|---|---|
| Rail | G32, TH 35-7.5, TH 35-15 |
| Wire stripping length | 9.5 mm 0.374 in |
| Tool | Flat screwdriver Ø 4 mm Ø 0.157 in |
| Torque | 0.5 - 0.6 N.m 4.4 - 5.3 lb.in |

The connecting capacity data for one Rigid - Solid / Stranded - Flexible conductor (when applicable) is a mandatory information required by IEC, UL and CSA standards.
All other data are provided as supplementary information only. for more details, please consult our CB, UL or CSA certificates and technical datasheet available on http://www.te.com

CE | RoHS | USR CNR | cCSAus | Gost R

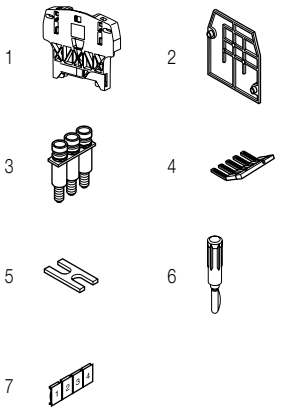


### Accessories

| | Description | | | Color | Type | Part Number | | Pkg qty | Weight (1 pce) g |
|---|---|---|---|---|---|---|---|---|---|
| 1 | **End stops** | 12 mm | 0.472 in | Grey | BAZH1 | 1SNK900102R0000 | | 50 | 24.00 |
| 2 | **End sections** | 1 mm | 0.039 in | Grey | FEMS6D | 1SNA116591R0500 | | 20 | 3.70 |
| 3 | **Jumper bars** | 2 poles | 32 A | Grey | BJMI6D-2 | 1SNA179668R2000 | | 10 | 4.00 |
| | | 3 poles | | | BJMI6D-3 | 1SNA179669R2100 | | 10 | 6.00 |
| | | 4 poles | | | BJMI6D-4 | 1SNA179670R2600 | | 10 | 8.00 |
| | | 5 poles | | | BJMI6D-5 | 1SNA179671R1300 | | 10 | 10.00 |
| | | 10 poles | | | BJMI6D-10 | 1SNA179672R1400 | | 10 | 20.00 |
| 4 | **Lateral jumper bars** | 10 poles | 35 A | | PC61-10 | 1SNA163311R2200 | | 10 | 5.00 |
| 5 | **Cross spacing jumpers** | 5 mm 0.200 in - 6 mm 0.236 in - 8 mm 0.315 in | | | EL6 | 1SNA173627R2100 | | 10 | 0.10 |
| 6 | **Test plugs** | DIA 2 mm 0.079 in | | Black | FC2 | 1SNA007865R2600 | | 100 | |
| 7 | **Terminal block markers** | Blank card | | White | RC610 | 1SNA233000R0100 | | 1 | 7.50 |

Complete list of accessories is indicated in the terminal block datasheet.
Some accessories such as jumper bars may modify the terminal block's ratings: complete information in the accessories catalogue pages.

Technical data valid for copper conductors only.

1SNC161094S0201 - Rev. B

# M4/6.SB screw clamp terminal blocks

## Disconnect with plug - 6 mm 0.236 in spacing

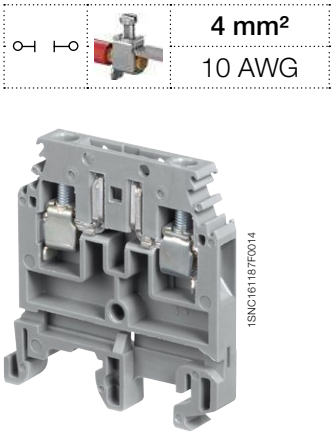


M4/6.SB

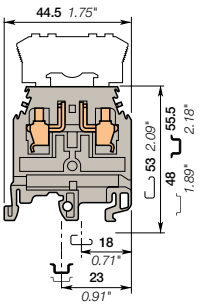


**6 mm** 0.236 in spacing

| | |
|---|---|
| | **4 mm²** |
| | 10 AWG |

### Description

- Ease your disconnect operations with the disconnect component holder plug,
- Same profile as M4/6 feed-through terminal block for aligned marking.

### Ordering details

| Description | | Color | Type | Part Number | | Pkg qty | Weight (1 pce) g |
|---|---|---|---|---|---|---|---|
| **Disconnect** | By polarized plug | Grey | M4/6.SB | 1SNA115435R0700 | | 50 | 10.00 |

### Main technical data

| Connecting capacity | | IEC | UL | CSA |
|---|---|---|---|---|
| **1 conductor per clamp** | Rigid - Solid / Stranded | 0.5-4 mm² | 22-10 AWG | 24-10 AWG |
| | Flexible | 0.5-4 mm² | | |
| | with insulated ferrule | | | |
| | Gauge | A4 | | |
| **Rated current / Rated cross section** | | 10 A / 4 mm² | 10 A / 10 AWG | 15 A / 10 AWG |
| **Rated short-time withstand current** (1s) | | 120 A | | |
| **Rated voltage** | | 250 V | 300 V | 600 V |
| **Impulse withstand voltage** | | 4000 V | | |
| **Protection** | | IP20 | NEMA 1 | |

### Mounting instructions

| | |
|---|---|
| Rail | G32, TH 35-7.5, TH 35-15 |
| Wire stripping length | 9.5 mm<br>0.374 in |
| Tool | Flat screwdriver<br>Ø 4 mm<br>Ø 0.157 in |
| Torque | 0.5 - 0.8 N.m<br>4.4 - 7.1 lb.in |

The connecting capacity data for one Rigid - Solid / Stranded - Flexible conductor (when applicable) is a mandatory information required by IEC, UL and CSA standards.
All other data are provided as supplementary information only. For more details, please consult our CB, UL or CSA certificates and technical datasheet available on http://www.te.com

CE RoHS USR cCSAus Gost R

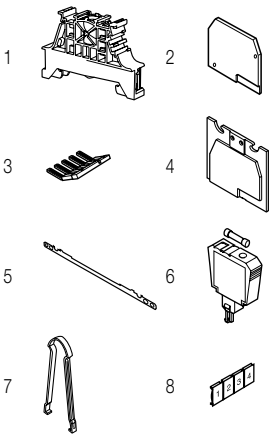


### Accessories

| | Description | | | Color | Type | Part Number | | Pkg qty | Weight (1 pce) g |
|---|---|---|---|---|---|---|---|---|---|
| 1 | **End stops** | 10 mm | 0.394 in | Grey | BAM4 | 1SNK900001R0000 | | 50 | 12.00 |
| | | 9 mm | 0.354 in | | BAZ1 | 1SNK900002R0000 | | 50 | 4.70 |
| 2 | **End sections** | 3 mm | 0.118 in | Grey | FEM62 | 1SNA114994R0700 | | 20 | 2.40 |
| 3 | **Lateral jumper bars** | 10 poles | 35 A | | PC61-10 | 1SNA163311R2200 | | 10 | 5.00 |
| 4 | **Circuit separators** | 3 mm | 0.118 in | Grey | SCF6 | 1SNA118707R0300 | | 20 | |
| 5 | **Shield connectors** | | | | CBM5 | 1SNA178745R1400 | | 50 | |
| 6 | **Component plugs** | | | Beige | BNSV62 | 1SNA196854R1500 | | 50 | 6.00 |
| | | With 48V blown fuse indicator | | | BNF652-D1-BE | 1SNA196966R1500 | | 50 | 7.00 |
| | | With 110-230V blown fuse indicator | | | BNF652L-BE | 1SNA196967R1600 | | 50 | 7.00 |
| | | For 5x20 fuses | | | BNF652 | 1SNA196998R1600 | | 50 | 6.00 |
| | | With 24V blown fuse indicator | | | BNF652D-BE | 1SNA196999R1700 | | 50 | 7.00 |
| | | For FUAUTO fuses | | Black | BFAUTO | 1SNA299486R2400 | | 50 | 1.00 |
| | | With diode | | | BNS6DG1 | 1SNA400146R0000 | | 1 | 6.00 |
| 7 | **Extraction tools** | | | | EXBN2 | 1SNA171018R2000 | | 1 | |
| 8 | **Terminal block markers** | Blank card | | White | RC610 | 1SNA233000R0100 | | 1 | 7.50 |

Complete list of accessories is indicated in the terminal block datasheet.
Some accessories such as jumper bars may modify the terminal block's ratings: complete information in the accessories catalogue pages.

1SNC161060S0201 - Rev. B

Technical data valid for copper conductors only.

# M6/8.SB screw clamp terminal blocks

## Disconnect with plug - 8 mm 0.315 in spacing

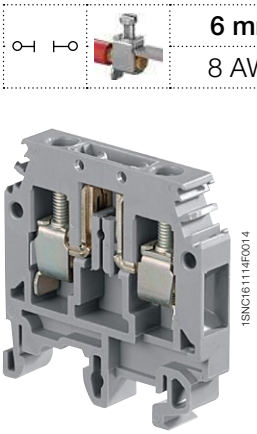


M6/8.SB

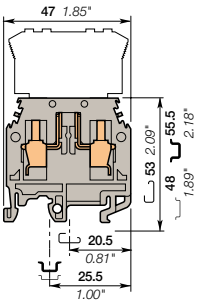


**8 mm** 0.315 in spacing

| | |
|---|---|
| | 6 mm² |
| | 8 AWG |

### Description

- Ease your disconnect operations with the disconnect component holder plug,
- Same profile as M6/8 feed-through terminal block for aligned marking.

### Ordering details

| Description | | Color | Type | Part Number | | Pkg qty | Weight (1 pce) g |
|---|---|---|---|---|---|---|---|
| **Disconnect** | By polarized plug | Grey | M6/8.SB | 1SNA115436R0000 | | 50 | 17.00 |

### Main technical data

| Connecting capacity | | IEC | UL | CSA |
|---|---|---|---|---|
| **1 conductor per clamp** | Rigid - Solid / Stranded | 0.5-10 mm² | 22-8 AWG | 22-8 AWG |
| | Flexible | 0.5-6 mm² | | |
| | with insulated ferrule | | | |
| | Gauge | A5 | | |
| **Rated current / Rated cross section** | | 15 A / 6 mm² | 20 A / 8 AWG | 20 A / 8 AWG |
| **Rated short-time withstand current** (1s) | | 180 A | | |
| **Rated voltage** | | 400 V | 300 V | 600 V |
| **Impulse withstand voltage** | | 4000 V | | |
| **Protection** | | IP20 | NEMA 1 | |

### Mounting instructions

| | | |
|---|---|---|
| Rail | | G32, TH 35-7.5, TH 35-15 |
| Wire stripping length | | 12 mm<br>0.472 in |
| Tool | | Flat screwdriver<br>Ø 4 - 5 mm<br>Ø 0.157 - 0.197 in |
| Torque | | 0.8 - 1 N.m<br>7.1 - 8.9 lb.in |

The connecting capacity data for one Rigid - Solid / Stranded - Flexible conductor (when applicable) is a mandatory information required by IEC, UL and CSA standards.
All other data are provided as supplementary information only. For more details, please consult our CB, UL or CSA certificates and technical datasheet available on http://www.te.com

CE RoHS USR cCSAus Gost R

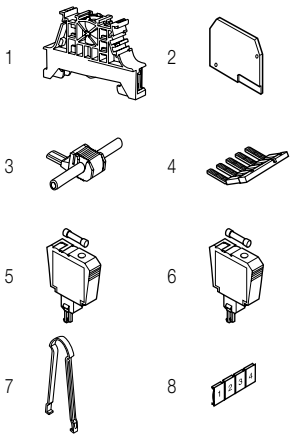


### Accessories

| | Description | | | Color | Type | Part Number | | Pkg qty | Weight (1 pce) g |
|---|---|---|---|---|---|---|---|---|---|
| 1 | **End stops** | 10 mm | 0.394 in | Grey | BAM4 | 1SNK900001R0000 | | 50 | 12.00 |
| | | 9 mm | 0.354 in | | BAZ1 | 1SNK900002R0000 | | 50 | 4.70 |
| 2 | **End sections** | 3 mm | 0.118 in | Grey | FEM8 | 1SNA113373R2600 | | 20 | 3.00 |
| 3 | **Jumper bars** | 1 poles | 24 A | Grey | AD2.5 | 1SNA114205R2000 | | 50 | 1.60 |
| 4 | **Lateral jumper bars** | 10 poles | 50 A | | PC8-10 | 1SNA163313R2400 | | 10 | 14.00 |
| 5 | **Component plugs** | For 5x20 and 5x25 fuses | | Orange | BNF52 | 1SNA105133R1700 | | 50 | 8.00 |
| | | | | Grey | BNF52 | 1SNA116924R0200 | | 50 | 8.00 |
| | | With solder leads and screws | | Grey | BNSV82 | 1SNA116927R0500 | | 50 | 8.00 |
| | | For 5x20 and 5x25 fuses | | Beige | BNF52 | 1SNA196924R0300 | | 50 | 8.00 |
| | | With solder leads and screws | | | BNSV82 | 1SNA196927R0600 | | 50 | 8.00 |
| 6 | **Short circuit plugs** | With test | | Grey | BNCT82 | 1SNA116926R0400 | | 50 | 9.00 |
| | | | | Beige | | 1SNA196926R0500 | | 50 | 9.00 |
| 7 | **Extraction tools** | | | | EXBN2 | 1SNA171018R2000 | | 1 | |
| 8 | **Terminal block markers** | Blank card | | White | RC810 | 1SNA234000R0200 | | 1 | 8.20 |

Complete list of accessories is indicated in the terminal block datasheet.
Some accessories such as jumper bars may modify the terminal block's ratings: complete information in the accessories catalogue pages.

Technical data valid for copper conductors only.



1SNC161062S0201 - Rev. B

# M4/6.D2.SB screw clamp terminal blocks

## Disconnect with plug - with test socket - 6 mm 0.236 in spacing

4 mm²

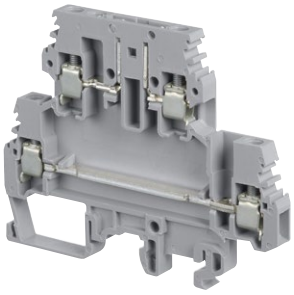

1SNC161164F0014

M4/6.D2.SB

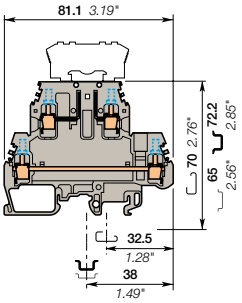


**6 mm** 0.236 in spacing

### Description

- Save space with double deck terminal blocks: 1 disconnect circuit on top + 1 independent feed-through circuit on bottom in just 6 mm 0.236 in spacing,
- Ease your disconnect operations with the disconnect component holder plug.

### Ordering details

| Description | | Color | Type | Part Number | | Pkg qty | Weight (1 pce) g |
|---|---|---|---|---|---|---|---|
| **Disconnect** | By polarized plug with 4 test sockets DIA 2 mm 0.079 in - 1 feed-through circuit on lower deck | Grey | M4/6.D2.SBT | 1SNA115702R2300 | | 50 | 21.00 |

### Main technical data

| Connecting capacity | | IEC | UL | CSA |
|---|---|---|---|---|
| **1 conductor per clamp** | Rigid - Solid / Stranded | 0.5-4 mm² | | |
| | Flexible | 0.5-4 mm² | | |
| | with insulated ferrule | | | |
| | Gauge | A4 | | |
| **Rated current / Rated cross section** | | 10 A / 4 mm² | | |
| **Rated short-time withstand current** (1s) | | 120 A | | |
| **Rated voltage** | | 250 V | | |
| **Impulse withstand voltage** | | 4000 V | | |
| **Protection** | | IP20 | NEMA 1 | |

### Mounting instructions

| | | |
|---|---|---|
| Rail | | G32. TH 35-7.5. TH 35-15 |
| Wire stripping length | | 9.5 mm 0.374 in |
| Tool | | Flat screwdriver Ø 4 mm Ø 0.157 in |
| Torque | | 0.5 - 0.6 N.m 4.4 - 5.3 lb.in |

The connecting capacity data for one Rigid - Solid / Stranded - Flexible conductor (when applicable) is a mandatory information required by IEC, UL and CSA standards.
All other data are provided as supplementary information only. For more details, please consult our CB, UL or CSA certificates and technical datasheet available on http://www.te.com

CE RoHS Gost R

### Accessories

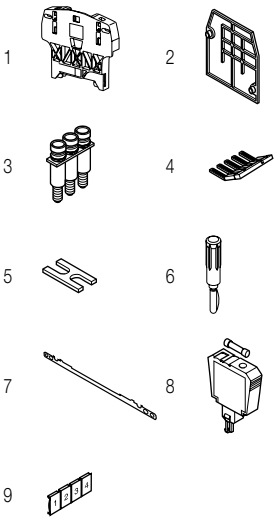

| | Description | | | Color | Type | Part Number | | Pkg qty | Weight (1 pce) g |
|---|---|---|---|---|---|---|---|---|---|
| 1 | **End stops** | 12 mm | 0.472 in | Grey | BAZH1 | 1SNK900102R0000 | | 50 | 24.00 |
| 2 | **End sections** | 1 mm | 0.039 in | Grey | FEMS6D | 1SNA116591R0500 | | 20 | 3.70 |
| 3 | **Jumper bars** | 2 poles | 32 A | | BJMI6D-2 | 1SNA179668R2000 | | 10 | 4.00 |
| | | 3 poles | | | BJMI6D-3 | 1SNA179669R2100 | | 10 | 6.00 |
| | | 4 poles | | | BJMI6D-4 | 1SNA179670R2600 | | 10 | 8.00 |
| | | 5 poles | | | BJMI6D-5 | 1SNA179671R1300 | | 10 | 10.00 |
| | | 10 poles | | | BJMI6D-10 | 1SNA179672R1400 | | 10 | 20.00 |
| 4 | **Lateral jumper bars** | 10 poles | 35 A | | PC61-10 | 1SNA163311R2200 | | 10 | 5.00 |
| 5 | **Cross spacing jumpers** | 5 mm 0.200 in - 6 mm 0.236 in - 8 mm 0.315 in | | | EL6 | 1SNA173627R2100 | | 10 | 0.10 |
| 6 | **Test plugs** | DIA 2 mm | 0.079 in | Black | FC2 | 1SNA007865R2600 | | 100 | |
| 7 | **Shield connectors** | | | | CBD2S | 1SNA178408R1400 | | 50 | |
| 8 | **Component plugs** | With solder leads and screws | | Grey | BNSV62 | 1SNA116854R1400 | | 50 | 6.00 |
| | | | | Beige | BNSV62 | 1SNA196854R1500 | | 50 | 6.00 |
| | | With 48V blown fuse indicator | | Beige | BNF652-D1-BE | 1SNA196966R1500 | | 50 | 7.00 |
| | | With 110-230V blown fuse indicator | | | BNF652L-BE | 1SNA196967R1600 | | 50 | 7.00 |
| | | For 5x20 fuses | | | BNF652 | 1SNA196998R1600 | | 50 | 6 |
| | | With 24V blown fuse indicator | | | BNF652D-BE | 1SNA196999R1700 | | 50 | 7.00 |
| | | For FUAUTO fuses | | Black | BFAUTO | 1SNA299486R2400 | | 50 | 1.00 |
| 9 | **Terminal block markers** | Blank card | | White | RC610 | 1SNA233000R0100 | | 1 | 7.50 |

Complete list of accessories is indicated in the terminal block datasheet.
Some accessories such as jumper bars may modify the terminal block's ratings: complete information in the accessories catalogue pages.

Technical data valid for copper conductors only.

1SNC161065S0201 - Rev. B

# M6/8.STP screw clamp terminal blocks

## Disconnect with push-turn knob - with test socket - 8 mm 0.315 in spacing

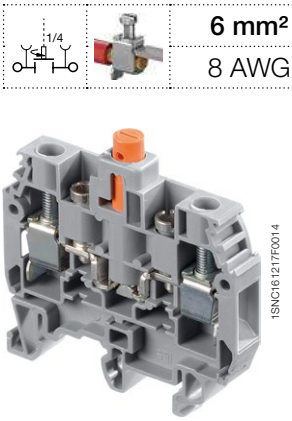


| 6 mm² |
|---|
| 8 AWG |




M6/8.STP

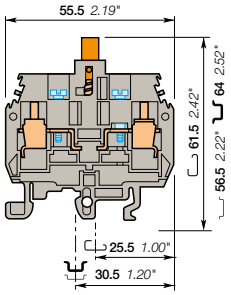


**8 mm** 0.315 in spacing

### Description

- Ease your disconnect operations with the disconnect ¼ turn push-turn knob,
- Possibility to seal in the open and closed position,
- Ease your test operations with the built-in test socket.

### Ordering details

| Description | | Color | Type | Part Number | | Pkg qty | Weight (1 pce) g |
|---|---|---|---|---|---|---|---|
| **Disconnect** | With 2 test sockets DIA 4 mm 0.157 in | Grey, orange | M6/8.STP1 | 1SNA115529R1500 | | 25 | 21.00 |

### Main technical data

| Connecting capacity | | IEC | UL | CSA |
|---|---|---|---|---|
| **1 conductor per clamp** | Rigid - Solid / Stranded | 0.5-10 mm² | | 8 AWG |
| | Flexible | 0.5-6 mm² | | |
| | with insulated ferrule | | | |
| | Gauge | | | |
| **Rated current / Rated cross section** | | 15 A / 6 mm² | | 15 A / 8 AWG |
| **Rated short-time withstand current** (1s) | | 720 A | | |
| **Rated voltage** | | 500 V | | 600 V |
| **Impulse withstand voltage** | | | | |
| **Protection** | | IP10 | NEMA | |

The connecting capacity data for one Rigid - Solid / Stranded - Flexible conductor (when applicable) is a mandatory information required by IEC, UL and CSA standards.
All other data are provided as supplementary information only. For more details, please consult our CB, UL or CSA certificates and technical datasheet available on http://www.te.com

RoHS RoHS | CSA | Gost R

### Mounting instructions

| | | |
|---|---|---|
| Rail | | G32, TH 35-7.5, TH 35-15 |
| Wire stripping length | | 11 mm 0.433 in |
| Tool | | Flat screwdriver Ø 4 mm Ø 0.157 in |
| Torque | | 0.8 - 1 N.m 7.1 - 8.9 lb.in |

### Notes

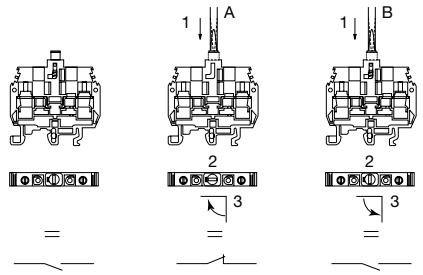


A: Closing operation
B: Opening operation
1: Push
2: Turn
3: stop

### Accessories

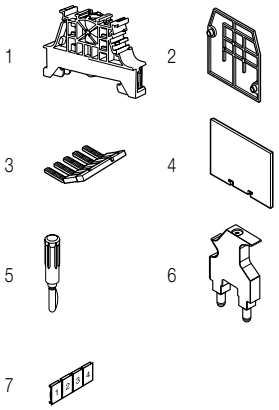


| | Description | | | Color | Type | Part Number | | Pkg qty | Weight (1 pce) g |
|---|---|---|---|---|---|---|---|---|---|
| 1 | **End stops** | 10 mm | 0.394 in | Grey | BAM4 | 1SNK900001R0000 | | 50 | 12.00 |
| | | 9 mm | 0.354 in | | BAZ1 | 1SNK900002R0000 | | 50 | 4.70 |
| 2 | **End sections** | 2.8 mm | 0.110 in | Grey | FEMT1 | 1SNA113137R0200 | | 50 | 2.00 |
| 3 | **Lateral jumper bars** | 2 poles | 50 A | | PC8-2 | 1SNA116538R1700 | | 10 | 3.00 |
| | | 3 poles | | | PC8-3 | 1SNA116539R1000 | | 10 | 4.00 |
| | | 4 poles | | | PC8-4 | 1SNA116540R2500 | | 10 | 6.00 |
| | | 10 poles | | | PC8-10 | 1SNA163313R2400 | | 10 | 14.00 |
| 4 | **Circuit separators** | 1 mm | 0.039 in | Grey | SCFT1 | 1SNA103588R2600 | | 20 | 20.00 |
| 5 | **Test plugs** | DIA 4 mm 0.157 in | | White | FC4 | 1SNA167860R0100 | | 10 | 10.00 |
| | | DIA 4 mm 0.157 in IP20 | | Red | FC4-1 | 1SNA167927R1000 | | 10 | 11.00 |
| 6 | **Short circuit plugs** | DIA 4 mm 0.157 in | | | BP8.A4 | 1SNA173888R2000 | | 10 | |
| | | | | Red | BNSTP2 | 1SNA196789R2400 | | 20 | 10.00 |
| | | With test DIA 4 mm 0.157 in | | Beige | BNSTP1 | 1SNA196792R1700 | | 20 | 14.00 |
| 7 | **Terminal block markers** | Blank card | | White | RC810 | 1SNA234000R0200 | | 1 | 8.20 |

Complete list of accessories is indicated in the terminal block datasheet.
Some accessories such as jumper bars may modify the terminal block's ratings: complete information in the accessories catalogue pages.

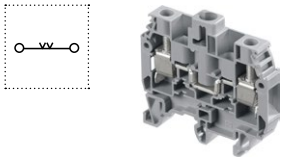

### Feed-through screw clamp terminal blocks

| Description | | Color | Type | Part Number | | Pkg qty | Weight (1 pce) g |
|---|---|---|---|---|---|---|---|
| **Feed-through** | Profile aligned with M6/8 STP... | Grey | M6/8.STP3 | 1SNA115500R2500 | | 25 | 21.00 |

Technical data valid for copper conductors only.



1SNC161108S0201 - Rev. B

# M6/8.STP screw clamp terminal blocks

## Disconnect with push-turn knob - with test socket - 8 mm 0.315 in spacing

| 6 mm² |
|---|
| 8 AWG |

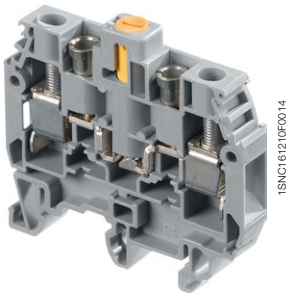


M6/8.STP

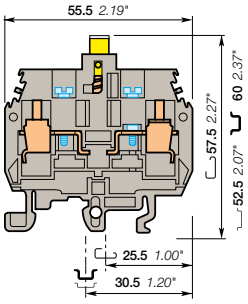


**8 mm** 0.315 in spacing

### Description

- Ease your disconnect operations with the disconnect ¼ turn push-turn knob,
- Possibility to seal in the open position,
- Ease your test operations with the built-in test socket.

### Ordering details

| Description | | Color | Type | Part Number | | Pkg qty | Weight (1 pce) g |
|---|---|---|---|---|---|---|---|
| **Disconnect** | With 2 test sockets DIA 4 mm 0.157 in | Grey, yellow | M6/8.STP | 1SNA115277R2000 | | 25 | 21.00 |
| | | Grey, black | M6/8.STP | 1SNA105141R2700 | | 25 | 21.00 |
| | | Grey, red | M6/8.STP | 1SNA105142R2000 | | 25 | 21.00 |

### Main technical data

| Connecting capacity | | IEC | UL | CSA |
|---|---|---|---|---|
| **1 conductor per clamp** | Rigid - Solid / Stranded | 0.5-10 mm² | 22-8 AWG | 8 AWG |
| | Flexible | 0.5-6 mm² | | |
| | with insulated ferrule | | | |
| | Gauge | | | |
| **Rated current / Rated cross section** | | 15 A / 6 mm² | 40 A / 8 AWG | 15 A / 8 AWG |
| **Rated short-time withstand current** (1s) | | 180 A | | |
| **Rated voltage** | | 500 V | 600 V | 600 V |
| **Impulse withstand voltage** | | | | |
| **Protection** | | IP10 | NEMA | |

The connecting capacity data for one Rigid - Solid / Stranded - Flexible conductor (when applicable) is a mandatory information required by IEC, UL and CSA standards.
All other data are provided as supplementary information only. For more details, please consult our CB, UL or CSA certificates and technical datasheet available on http://www.te.com

RoHS USR CSA Gost R

### Mounting instructions

| | | |
|---|---|---|
| Rail | | G32, TH 35-7.5, TH 35-15 |
| Wire stripping length | | 11 mm<br>0.433 in |
| Tool | | Flat screwdriver<br>Ø 4 mm<br>Ø 0.157 in |
| Torque | | 0.8 - 1 N.m<br>7.1 - 8.9 lb.in |

### Notes

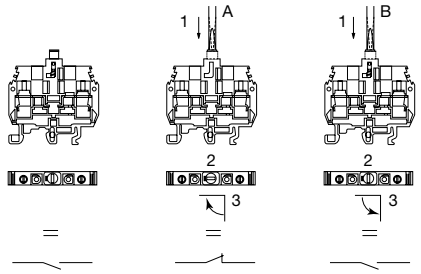


A: Closing operation
B: Opening operation
1: Push
2: Turn
3: stop

### Accessories

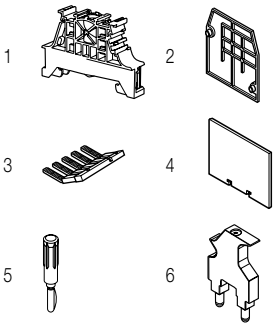


| | Description | | | Color | Type | Part Number | | Pkg qty | Weight (1 pce) g |
|---|---|---|---|---|---|---|---|---|---|
| 1 | **End stops** | 10 mm | 0.394 in | Grey | BAM4 | 1SNK900001R0000 | | 50 | 12.00 |
| | | 9 mm | 0.354 in | | BAZ1 | 1SNK900002R0000 | | 50 | 4.70 |
| 2 | **End sections** | 2.8 mm | 0.110 in | Grey | FEMT1 | 1SNA113137R0200 | | 50 | 2.00 |
| 3 | **Lateral jumper bars** | 2 poles | 50 A | | PC8-2 | 1SNA116538R1700 | | 10 | 3.00 |
| | | 3 poles | | | PC8-3 | 1SNA116539R1000 | | 10 | 4.00 |
| | | 4 poles | | | PC8-4 | 1SNA116540R2500 | | 10 | 6.00 |
| | | 10 poles | | | PC8-10 | 1SNA163313R2400 | | 10 | 14.00 |
| 4 | **Circuit separators** | 1 mm | 0.039 in | Grey | SCFT1 | 1SNA103588R2600 | | 20 | 20.00 |
| 5 | **Test plugs** | DIA 4 mm 0.157 in | | White | FC4 | 1SNA167860R0100 | | 10 | 10.00 |
| | | DIA 4 mm 0.157 in IP20 | | Red | FC4-1 | 1SNA167927R1000 | | 10 | 11.00 |
| 6 | **Short circuit plugs** | DIA 4 mm 0.157 in | | | BP8.A4 | 1SNA173888R2000 | | 10 | |
| | | | | Red | BNSTP2 | 1SNA196789R2400 | | 20 | 10.00 |
| | | With test DIA 4 mm 0.157 in | | Beige | BNSTP1 | 1SNA196792R1700 | | 20 | 14.00 |
| 7 | **Terminal block markers** | Blank card | | White | RC810 | 1SNA234000R0200 | | 1 | 8.20 |

Complete list of accessories is indicated in the terminal block datasheet.
Some accessories such as jumper bars may modify the terminal block's ratings: complete information in the accessories catalogue pages.

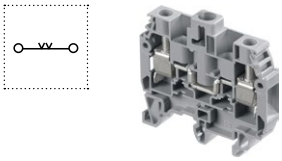

### Feed-through screw clamp terminal blocks

| Description | | Color | Type | Part Number | | Pkg qty | Weight (1 pce) g |
|---|---|---|---|---|---|---|---|
| **Feed-through** | Profile aligned with M6/8 STP... | Grey | M6/8.STP3 | 1SNA115500R2500 | | 25 | 21.00 |

Technical data valid for copper conductors only.

# M6/8.STP screw clamp terminal blocks
## Feed-through - 8 mm 0.315 in spacing

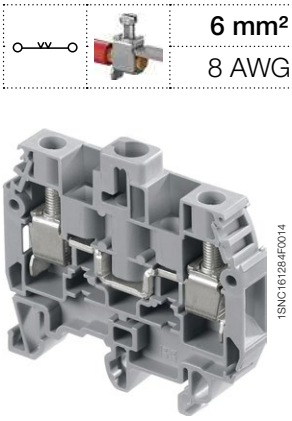


M6/8.STP

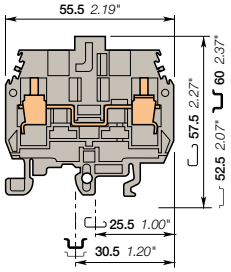


**8 mm** 0.315 in spacing

| | |
|---|---|
| | 6 mm² |
| | 8 AWG |

### Description

- Simplify the alternated feed-though an disconnect circuits operations with the same profile as M6/8 STP... ,
- The wiring of the alternated feed-though and disconnect circuits is easier.

### Ordering details

| Description | Color | Type | Part Number | | Pkg qty | Weight (1 pce) g |
|---|---|---|---|---|---|---|
| Feed-through | Grey | M6/8.STP3 | 1SNA115500R2500 | | 25 | 21.00 |

### Main technical data

| Connecting capacity | | IEC | UL | CSA |
|---|---|---|---|---|
| 1 conductor per clamp | Rigid - Solid / Stranded | 0.5-10 mm² | 22-8 AWG | 8 AWG |
| | Flexible | 0.5-6 mm² | | |
| | with insulated ferrule | | | |
| | Gauge | | | |
| Rated current / Rated cross section | | 41 A / 6 mm² | 40 A / 8 AWG | 15 A / 8 AWG |
| Rated short-time withstand current (1s) | | 720 A | | |
| Rated voltage | | 500 V | 600 V | 600 V |
| Impulse withstand voltage | | | | |
| Protection | | IP20 | NEMA 1 | |

The connecting capacity data for one Rigid - Solid / Stranded - Flexible conductor (when applicable) is a mandatory information required by IEC, UL and CSA standards.
All other data are provided as supplementary information only. For more details, please consult our CB, UL or CSA certificates and technical datasheet available on http://www.te.com

RoHS USR CSA Gost R

### Mounting instructions

| | |
|---|---|
| Rail | G32, TH 35-7.5, TH 35-15 |
| Wire stripping length | 11 mm<br>0.433 in |
| Tool | Flat screwdriver<br>Ø 4 mm<br>Ø 0.157 in |
| Torque | 0.8 - 1 N.m<br>7.1 - 8.9 lb.in |

2

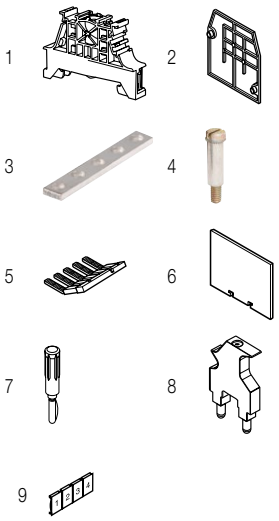


### Accessories

| | Description | | | Color | Type | Part Number | | Pkg qty | Weight (1 pce) g |
|---|---|---|---|---|---|---|---|---|---|
| 1 | End stops | 10 mm | 0.394 in | Grey | BAM4 | 1SNK900001R0000 | | 50 | 12.00 |
| | | 9 mm | 0.354 in | | BAZ1 | 1SNK900002R0000 | | 50 | 4.70 |
| 2 | End sections | 2.8 mm | 0.110 in | Grey | FEMT1 | 1SNA113137R0200 | | 50 | 2.00 |
| 3 | Jumper bars | 2 poles | 41 A | | BJS8 | 1SNA164581R1300 | | 10 | 3.10 |
| | | 3 poles | | | | 1SNA164582R1400 | | 10 | 3.10 |
| | | 4 poles | | | | 1SNA164583R1500 | | 10 | 3.10 |
| | | 20 poles | | | BJS8-20 | 1SNA174789R0500 | | 5 | 3.20 |
| 4 | Fastening kits | Sub assembly post + screw + washer | | | EV6I | 1SNA206394R0200 | | 20 | 2.00 |
| 5 | Lateral jumper bars | 2 poles | 50 A | | PC8-2 | 1SNA116538R1700 | | 10 | 3.00 |
| | | 3 poles | | | PC8-3 | 1SNA116539R1000 | | 10 | 4.00 |
| | | 4 poles | | | PC8-4 | 1SNA116540R2500 | | 10 | 6.00 |
| | | 10 poles | | | PC8-10 | 1SNA163313R2400 | | 10 | 14.00 |
| 6 | Circuit separators | 1 mm | 0.039 in | Grey | SCFT1 | 1SNA103588R2600 | | 20 | 20.00 |
| 7 | Test plugs | DIA 4 mm | 0.157 in | White | FC4 | 1SNA167860R0100 | | 10 | 10.00 |
| | | DIA 4 mm | 0.157 in IP20 | Red | FC4-1 | 1SNA167927R1000 | | 10 | 11.00 |
| 8 | Short circuit plugs | DIA 4 mm | 0.157 in | | BP8.A4 | 1SNA173888R2000 | | 10 | |
| | | | | Red | BNSTP2 | 1SNA196789R2400 | | 20 | 10.00 |
| | | With test DIA 4 mm | 0.157 in | Beige | BNSTP1 | 1SNA196792R1700 | | 20 | 14.00 |
| 9 | Terminal block markers | Blank card | | White | RC810 | 1SNA234000R0200 | | 1 | 8.20 |

Complete list of accessories is indicated in the terminal block datasheet.
Some accessories such as jumper bars may modify the terminal block's ratings: complete information in the accessories catalogue pages.

1SNC161068S0201 - Rev. C

Technical data valid for copper conductors only.

# M6/8.ST screw clamp terminal blocks

## Test disconnect with a screwdriver sliding link - 8 mm 0.315 in spacing

6 mm²
8 AWG

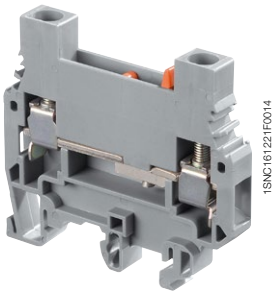


M6/8.ST

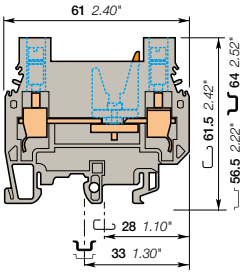


**8 mm** 0.315 in spacing

### Description

- Compact disconnect terminal blocks:
- Secure your disconnect operations with the disconnect orange sliding link operated with a screwdriver,
- Ease your test operations with the two built-in test sockets screws compatible with DIA 4 mm 0.157 in test plugs.

### Ordering details

| Description | | Color | Type | Part Number | | Pkg pce | Weight (1 pce) g |
|---|---|---|---|---|---|---|---|
| **Disconnect** | With 2 test sockets DIA 4 mm 0.157 in | Grey | M6/8.STA | 1SNA115359R0200 | | 25 | 30.00 |

### Main technical data

| | | IEC | UL | CSA |
|---|---|---|---|---|
| **1 conductor per clamp** | Rigid - Solid / Stranded | 0.5-10 mm² | 22 - 8 AWG | |
| | Flexible | 0.5-6 mm² | | |
| | with insulated ferrule | | | |
| | Gauge | A5 | | |
| **Rated current / Rated cross section** | | 30 A / 6 mm² | 50 A / 8 AWG | |
| **Rated short-time withstand current** (1s) | | 480 A | | |
| **Rated voltage** | | 500 V | 600 V | |
| **Impulse withstand voltage** | | | | |
| **Protection** | | IP20 | NEMA 1 | |

### Mounting instructions

| | | |
|---|---|---|
| Rail | | G32, TH 35-7.5, TH 35-15 |
| Wire stripping length | | 11 mm<br>0.43 in |
| Screw clamp Tool | | Flat screwdriver<br>Ø 5.5 mm<br>Ø 0.217 in |
| Torque | | 0.8 - 1 N.m<br>7.1 - 8.9 lb.in |
| Disconnect device Tool | | Flat screwdriver<br>Ø 4 mm<br>Ø 0.157 in |
| Torque | | 0.4 - 0.6 N.m<br>3.5 - 5.3 lb.in |

The connecting capacity data for one Rigid - Solid / Stranded - Flexible conductor (when applicable) is a mandatory information required by IEC, UL and CSA standards.
All other data are provided as supplementary information only. For more details, please consult our CB, UL or CSA certificates and technical datasheet available on http://www.te.com

CE | RoHS | USR | Gost R

### Accessories

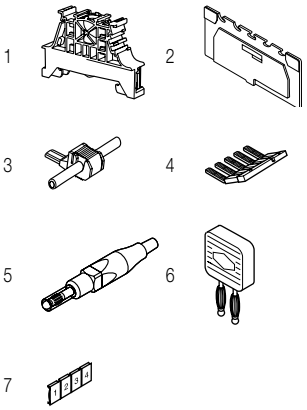


| | Description | | | Color | Type | Part Number | | Pkg pce | Weight (1 pce) g |
|---|---|---|---|---|---|---|---|---|---|
| 1 | **End stops** | 10 mm | 0.394 in | Grey | BAM4 | 1SNK900001R0000 | | 50 | 12.00 |
| | | 9 mm | 0.354 in | | BAZ1 | 1SNK900002R0000 | | 50 | 4.70 |
| 2 | **End sections** | 3 mm | 0.118 in | Grey | FEMT4 | 1SNA114778R0500 | | 10 | 5.60 |
| | | | | | FEMSTA | 1SNA116979R2100 | | 10 | 3.60 |
| 3 | **Jumper bars** | 1 poles | 24 A | Grey | AD2.5 | 1SNA114205R2000 | | 50 | 1.60 |
| 4 | **Lateral jumper bars** | 2 poles | 50 A | Black | PC8-2 | 1SNA116538R1700 | | 10 | 3.00 |
| | | 3 poles | | | PC8-3 | 1SNA116539R1000 | | 10 | 4.00 |
| | | 4 poles | | | PC8-4 | 1SNA116540R2500 | | 10 | 6.00 |
| | | 10 poles | | | PC8-10 | 1SNA163313R2400 | | 10 | 14.00 |
| 5 | **Test plugs** | DIA 4 mm 0.157 in IP20 | | Red | FC4-1 | 1SNA167927R1000 | | 10 | 11.00 |
| 6 | **Short circuit plugs** | | | | BP8.A4 | 1SNA173888R2000 | | 10 | |
| 7 | **Terminal block markers** | Blank card | | White | RC810 | 1SNA234000R0200 | | 1 | 8.20 |

Complete list of accessories is indicated in the terminal block datasheet.
Some accessories such as jumper bars may modify the terminal block's ratings: complete information in the accessories catalogue pages.

Technical data valid for copper conductors only.

# M6/8.ST screw clamp terminal blocks

## Test disconnect with a screwdriver sliding link - 8 mm 0.315 in spacing

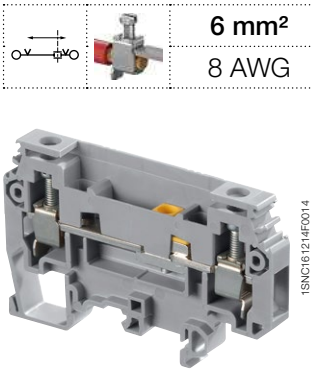


M6/8.ST

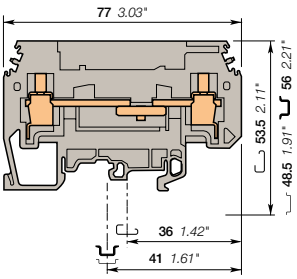


**8 mm** 0.315 in spacing

| 6 mm² |
|---|
| 8 AWG |

### Description

Secure your disconnect operations with the disconnect sliding link operated with a screwdriver.

### Ordering details

| Description | Color | Type | Part Number | | Pkg pce | Weight (1 pce) g |
|---|---|---|---|---|---|---|
| **Disconnect** | Grey | M6/8.ST | 1SNA115236R1700 | | 25 | 30.00 |

### Main technical data

| | | IEC | UL | CSA |
|---|---|---|---|---|
| **1 conductor per clamp** | Rigid - Solid / Stranded | 0.5-10 mm² | 18 - 8 AWG | 18-8 AWG |
| | Flexible | 0.5-6 mm² | | |
| | with insulated ferrule | | | |
| | Gauge | A5 | | |
| **Rated current / Rated cross section** | | 40 A / 6 mm² | 30 A / 8 AWG | 30 A / 8 AWG |
| **Rated short-time withstand current** (1s) | | 720 A | | |
| **Rated voltage** | | 630 V | 150 V | 150 V |
| **Impulse withstand voltage** | | | | |
| **Protection** | | IP20 | NEMA 1 | |

### Mounting instructions

| | |
|---|---|
| Rail | G32, TH 35-7.5, TH 35-15 |
| Wire stripping length | 13 mm<br>0.51 in |
| Screw clamp Tool | Flat screwdriver<br>Ø 5 mm<br>Ø 0.197 in |
| Torque | 0.8 - 1 N.m<br>7.1 - 8.9 lb.in |
| Disconnect device Tool | Flat screwdriver<br>Ø 3.5 mm<br>Ø 0.138 in |
| Torque | 0.4 - 0.6 N.m<br>3.5 - 5.3 lb.in |

The connecting capacity data for one Rigid - Solid / Stranded - Flexible conductor (when applicable) is a mandatory information required by IEC, UL and CSA standards.
All other data are provided as supplementary information only. For more details, please consult our CB, UL or CSA certificates and technical datasheet available on http://www.te.com

CE RoHS USR CSA Gost R

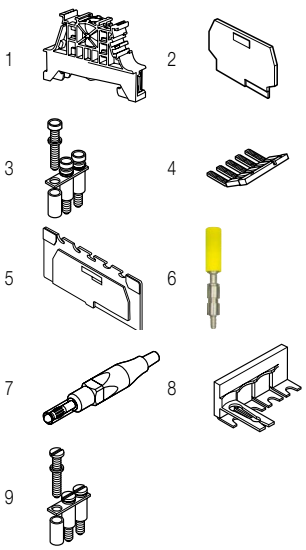


### Accessories

| | Description | | | Color | Type | Part Number | | Pkg pce | Weight (1 pce) g |
|---|---|---|---|---|---|---|---|---|---|
| 1 | **End stops** | | 0.394 in | Grey | BAM4 | 1SNK900001R0000 | | 50 | 12.00 |
| | | | 0.354 in | | BAZ1 | 1SNK900002R0000 | | 50 | 4.70 |
| 2 | **End sections** | 1 mm | 0.039 in | Grey | FEMT2 | 1SNA113629R2700 | | 10 | 2.00 |
| 3 | **Jumper bars** | 20 poles | 41 A | | BJS8-20 | 1SNA174789R0500 | | 5 | 3.20 |
| 4 | **Lateral jumper bars** | 50 A | | Black | PC8-10 | 1SNA163313R2400 | | 10 | 14.00 |
| | | | | | PC8-R1 | 1SNA400711R0600 | | 10 | 6.60 |
| | | | | | PC8-R2 | 1SNA400712R0700 | | 10 | 7.84 |
| | | | | | PC8-R3 | 1SNA400713R0000 | | 10 | 9.00 |
| | | | | | PC8-R4 | 1SNA400724R0300 | | 10 | 4.50 |
| 5 | **Circuit separators** | 3 mm | 0.118 in | Grey | SCFT2 | 1SNA114522R0500 | | 20 | |
| 6 | **Test sockets** | DIA 4 mm 0.157 in IP20 | | Yellow | AJS9 | 1SNA179726R0200 | | 25 | 5.00 |
| | | | | Black | AJS9-1 | 1SNA206680R1500 | | 25 | 3.60 |
| | | | | Green | AJS9-2 | 1SNA206681R0200 | | 25 | 3.60 |
| | | | | Grey | AJS9-3 | 1SNA206682R0300 | | 25 | 3.60 |
| | | | | Blue | AJS9-4 | 1SNA206683R0400 | | 25 | 3.60 |
| | | | | Red | AJS9-5 | 1SNA206720R1400 | | 25 | 3.60 |
| | | DIA 4 mm 0.157 in | | | AL4-M3 | 1SNA206721R0100 | | 50 | 1.10 |
| 7 | **Test plugs** | DIA 4 mm 0.157 in IP20 | | Red | FC4-1 | 1SNA167927R1000 | | 10 | 11.00 |
| 8 | **Short circuit bridges** | 2 poles | | Yellow | SC-JB8-2 | 1SNK900652R0000 | | 25 | 2.00 |
| | | 3 poles | | | SC-JB8-3 | 1SNK900653R0000 | | 25 | 3.40 |
| | | 4 poles | | | SC-JB8-4 | 1SNK900654R0000 | | 25 | 4.70 |
| 9 | **Fastening kits** | Sub assembly post + screw + washer | | | EV8S | 1SNA168401R0300 | | 20 | 3.00 |

Complete list of accessories is indicated in the terminal block datasheet.
Some accessories such as jumper bars may modify the terminal block's ratings: complete information in the accessories catalogue pages.

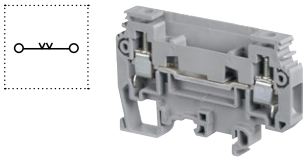

### Feed-through screw clamp terminal blocks

| Description | | Color | Type | Part Number | | Pkg pce | Weight (1 pce) g |
|---|---|---|---|---|---|---|---|
| **Feed-through** | Profile aligned with M6/8.ST... | Grey | M6/8.ST7 | 1SNA115243R2600 | | 25 | 20.00 |

Technical data valid for copper conductors only.



1SNC161055S0201

# M6/8.ST screw clamp terminal blocks

## Test disconnect with a screwdriver sliding link - 8 mm 0.315 in spacing

6 mm²
8 AWG

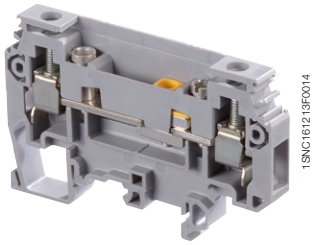


M6/8.ST

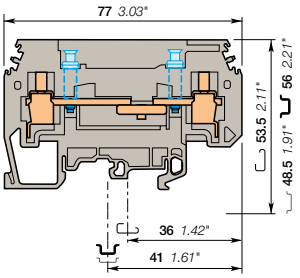


**8 mm** 0.315 in spacing

### Description

- Secure your disconnect operations with the disconnect sliding link operated with a screwdriver,
- Ease your test operations with the 2 independent built-in test sockets compatible with DIA 4 mm 0.157 in test plugs.

### Ordering details

| Description | | Color | Type | Part Number | | Pkg pce | Weight (1 pce) g |
|---|---|---|---|---|---|---|---|
| **Disconnect** | With 2 test sockets DIA 4 mm 0.157 in | Grey | M6/8.ST1 | 1SNA115237R1000 | | 25 | 30.00 |

### Main technical data

| | | IEC | UL | CSA |
|---|---|---|---|---|
| **1 conductor per clamp** | Rigid - Solid / Stranded | 0.5-10 mm² | 18 - 8 AWG | 18-8 AWG |
| | Flexible | 0.5-6 mm² | | |
| | with insulated ferrule | | | |
| | Gauge | A5 | | |
| **Rated current / Rated cross section** | | 40 A / 6 mm² | 30 A / 8 AWG | 30 A / 8 AWG |
| **Rated short-time withstand current** (1s) | | 720 A | | |
| **Rated voltage** | | 630 V | 150 V | 150 V |
| **Impulse withstand voltage** | | | | |
| **Protection** | | | NEMA | |

### Mounting instructions

| | |
|---|---|
| Rail | G32, TH 35-7.5, TH 35-15 |
| Wire stripping length | 13 mm<br>0.51 in |
| Screw clamp Tool | Flat screwdriver<br>Ø 5 mm<br>Ø 0.197 in |
| Torque | 0.8 - 1 N.m<br>7.1 - 8.9 lb.in |
| Disconnect device Tool | Flat screwdriver<br>Ø 3.5 mm<br>Ø 0.138 in |
| Torque | 0.4 - 0.6 N.m<br>3.5 - 5.3 lb.in |

The connecting capacity data for one Rigid - Solid / Stranded - Flexible conductor (when applicable) is a mandatory information required by IEC, UL and CSA standards.
All other data are provided as supplementary information only. For more details, please consult our CB, UL or CSA certificates and technical datasheet available on http://www.te.com

CE | RoHS | USR | CSA | Gost R

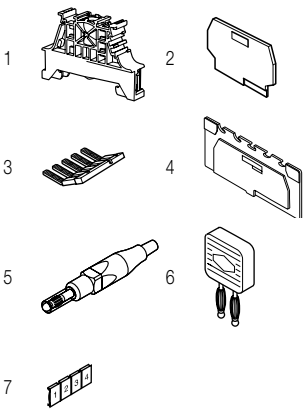


### Accessories

| | Description | | | Color | Type | Part Number | | Pkg pce | Weight (1 pce) g |
|---|---|---|---|---|---|---|---|---|---|
| 1 | **End stops** | 10 mm | 0.394 in | Grey | BAM4 | 1SNK900001R0000 | | 50 | 12.00 |
| | | 9 mm | 0.354 in | | BAZ1 | 1SNK900002R0000 | | 50 | 4.70 |
| 2 | **End sections** | 1 mm | 0.039 in | Grey | FEMT2 | 1SNA113629R2700 | | 10 | 2.00 |
| 3 | **Lateral jumper bars** | 50 A | | Black | PC8-10 | 1SNA163313R2400 | | 10 | 14.00 |
| | | | | | PC8-R1 | 1SNA400711R0600 | | 10 | 6.60 |
| | | | | | PC8-R2 | 1SNA400712R0700 | | 10 | 7.84 |
| | | | | | PC8-R3 | 1SNA400713R0000 | | 10 | 9.00 |
| | | | | | PC8-R4 | 1SNA400724R0300 | | 10 | 4.50 |
| 4 | **Circuit separators** | 3 mm | 0.118 in | Grey | SCFT2 | 1SNA114522R0500 | | 20 | |
| 5 | **Test plugs** | DIA 4 mm 0.157 in IP20 | | Red | FC4-1 | 1SNA167927R1000 | | 10 | 11.00 |
| 6 | **Short circuit plugs** | DIA 4 mm 0.157 in | | | BP8.A4 | 1SNA173888R2000 | | 10 | |
| 7 | **Terminal block markers** | Blank card | | White | RC810 | 1SNA234000R0200 | | 1 | 8.20 |

Complete list of accessories is indicated in the terminal block datasheet.
Some accessories such as jumper bars may modify the terminal block's ratings: complete information in the accessories catalogue pages.

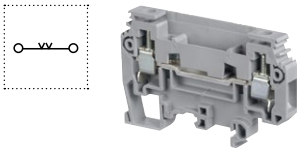

### Feed-through screw clamp terminal blocks

| Description | | Color | Type | Part Number | | Pkg pce | Weight (1 pce) g |
|---|---|---|---|---|---|---|---|
| **Feed-through** | Profile aligned with M6/8.ST... | Grey | M6/8.ST7 | 1SNA115243R2600 | | 25 | 20.00 |

Technical data valid for copper conductors only.

# M6/8.ST screw clamp terminal blocks

## Test disconnect with insulated rod sliding link - 8 mm 0.315 in spacing

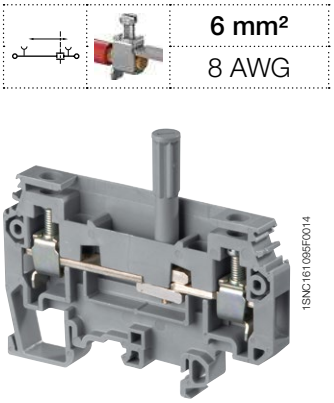

6 mm²
8 AWG




M6/8.ST

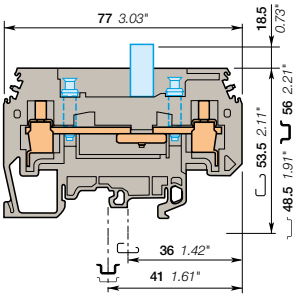


**8 mm** 0.315 in spacing

### Description

- Secure your disconnect operations with the disconnect sliding link operated with a screwdriver,
- Ease your test operations with the two independent built-in test sockets compatible with DIA 4 mm 0.157 in test plugs.

### Ordering details

| Description | | Color | Type | Part Number | | Pkg pce | Weight (1 pce) g |
|---|---|---|---|---|---|---|---|
| **Disconnect** | With 2 test sockets DIA 4 mm 0.157 in | Grey | M6/8.ST3 | 1SNA115239R2200 | | 25 | 30.00 |

### Main technical data

| | | IEC | UL | CSA |
|---|---|---|---|---|
| **1 conductor per clamp** | Rigid - Solid / Stranded | 0.5-10 mm² | 18 - 8 AWG | 18-8 AWG |
| | Flexible | 0.5-6 mm² | | |
| | with insulated ferrule | | | |
| | Gauge | A5 | | |
| **Rated current / Rated cross section** | | 40 A / 6 mm² | 30 A / 8 AWG | 30 A / 8 AWG |
| **Rated short-time withstand current** (1s) | | 720 A | | |
| **Rated voltage** | | 630 V | 150 V | 150 V |
| **Impulse withstand voltage** | | | | |
| **Protection** | | | NEMA | |

### Mounting instructions

| | |
|---|---|
| Rail | G32, TH 35-7.5, TH 35-15 |
| Wire stripping length | |
| Screw clamp Tool | Flat screwdriver Ø 5 mm Ø 0.197 in |
| Torque | 0.8 - 1 N.m 7.1 - 8.9 lb.in |
| Disconnect device Tool | Flat screwdriver Ø 3.5 mm Ø 0.138 in |
| Torque | 0.4 - 0.6 N.m 3.5 - 5.3 lb.in |

The connecting capacity data for one Rigid - Solid / Stranded - Flexible conductor (when applicable) is a mandatory information required by IEC, UL and CSA standards.
All other data are provided as supplementary information only. For more details, please consult our CB, UL or CSA certificates and technical datasheet available on http://www.te.com

CE RoHS USR CSA Gost R

### Accessories

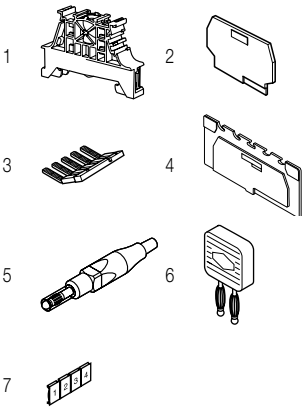


| | Description | | | Color | Type | Part Number | | Pkg pce | Weight (1 pce) g |
|---|---|---|---|---|---|---|---|---|---|
| 1 | **End stops** | 10 mm | | Grey | BAM4 | 1SNK900001R0000 | | 50 | 12.00 |
| | | 9 mm | | | BAZ1 | 1SNK900002R0000 | | 50 | 4.70 |
| 2 | **End sections** | 1 mm | 0.039 in | Grey | FEMT2 | 1SNA113629R2700 | | 10 | 2.00 |
| 3 | **Lateral jumper bars** | 50 A | | Black | PC8-10 | 1SNA163313R2400 | | 10 | 14.00 |
| | | | | | PC8-R1 | 1SNA400711R0600 | | 10 | 6.60 |
| | | | | | PC8-R2 | 1SNA400712R0700 | | 10 | 7.84 |
| | | | | | PC8-R3 | 1SNA400713R0000 | | 10 | 9.00 |
| | | | | | PC8-R4 | 1SNA400724R0300 | | 10 | 4.50 |
| 4 | **Circuit separators** | 3 mm | 0.118 in | Grey | SCFT2 | 1SNA114522R0500 | | 20 | |
| 5 | **Test plugs** | DIA 4 mm 0.157 in IP20 | | Red | FC4-1 | 1SNA167927R1000 | | 10 | 11.00 |
| 6 | **Short circuit plugs** | DIA 4 mm 0.157 in | | | BP8.A4 | 1SNA173888R2000 | | 10 | |
| 7 | **Terminal block markers** | Blank card | | White | RC810 | 1SNA234000R0200 | | 1 | 8.20 |

Complete list of accessories is indicated in the terminal block datasheet.
Some accessories such as jumper bars may modify the terminal block's ratings: complete information in the accessories catalogue pages.

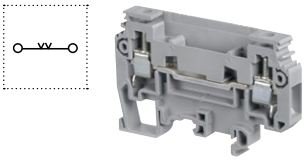

### Feed-through screw clamp terminal blocks

| Description | | Color | Type | Part Number | | Pkg pce | Weight (1 pce) g |
|---|---|---|---|---|---|---|---|
| **Feed-through** | Profile aligned with M6/8.ST... | Grey | M6/8.ST7 | 1SNA115243R2600 | | 25 | 20.00 |

Technical data valid for copper conductors only.

# M6/8.ST screw clamp terminal blocks

## Test disconnect with a screwdriver sliding link - 8 mm 0.315 in spacing

6 mm²
8 AWG

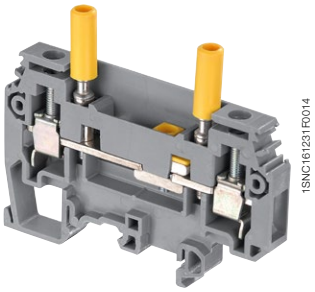


M6/8.ST

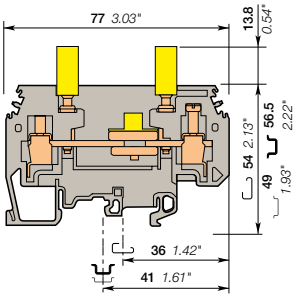


**8 mm** 0.315 in spacing

### Description

- Terminal blocks especially designed for current transformers circuits:
- Easy and secured current measurement thanks to the two built-in test yellow sockets compatible with IP20 DIA 4 mm 0.157 in test plugs,
- Convenient short-circuit operations with the PCS sliding short circuiting bridges from 2 to 4 poles,
- Tests sockets available as well in black, green, grey and blue.

### Ordering details

| Description | | Color | Type | Part Number | | Pkg pce | Weight (1 pce) g |
|---|---|---|---|---|---|---|---|
| **Disconnect** | With two yellow test sockets DIA 4 mm 0.157 in | Grey | M6/8.ST1.IP20 | 1SNA115971R1000 | | 25 | 40.00 |

### Main technical data

| | | IEC | UL | CSA |
|---|---|---|---|---|
| **1 conductor per clamp** | Rigid - Solid / Stranded | 0.5 - 10 mm² | 18 - 8 AWG | 18 - 8 AWG |
| | Flexible | 0.5 - 6 mm² | | |
| | with insulated ferrule | | | |
| | Gauge | A5 | | |
| **Rated current / Rated cross section** | | 40 A / 6 mm² | 30 A / 8 AWG | 30 A / 8 AWG |
| **Rated short-time withstand current** (1s) | | 720 A | | |
| **Rated voltage** | | 630 V | 150 V | 150 V |
| **Impulse withstand voltage** | | 8000 V | | |
| **Protection** | | IP20 | NEMA 1 | |

### Mounting instructions

| | | |
|---|---|---|
| Rail | | G32, TH 35-7.5, TH 35-15 |
| Wire stripping length | | 13 mm<br>0.51 in |
| Screw clamp Tool | | Flat screwdriver<br>Ø 3.5 mm<br>Ø 0.138 in |
| Torque | | 0.8 - 1 N.m<br>7.1 - 8.9 lb.in |
| Disconnect device Tool | | Flat screwdriver<br>Ø 3.5 mm<br>Ø 0.138 in |
| Torque | | 0.5 N.m<br>4.45 lb.in |
| Test socket Tool | | Flat screwdriver<br>Ø 3.5 mm<br>Ø 0.138 in |
| Torque | | 0.6 N.m<br>5.34 lb.in |

The connecting capacity data for one Rigid - Solid / Stranded - Flexible conductor (when applicable) is a mandatory information required by IEC, UL and CSA standards.
All other data are provided as supplementary information only. For more details, please consult our CB, UL or CSA certificates and technical datasheet available on http://www.te.com

CE RoHS USR CSA Gost R

### Accessories

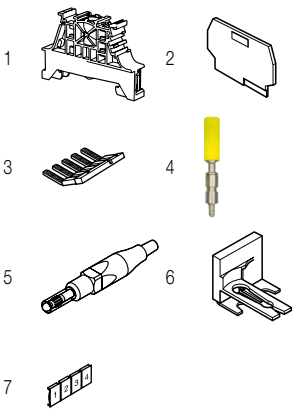


| | Description | | | Color | Type | Part Number | | Pkg pce | Weight (1 pce) g |
|---|---|---|---|---|---|---|---|---|---|
| 1 | **End stops** | 10 mm | 0.394 in | Grey | BAM4 | 1SNK900001R0000 | | 50 | 12.00 |
| | | 9 mm | 0.354 in | | BAZ1 | 1SNK900002R0000 | | 50 | 4.70 |
| 2 | **End sections** | 1 mm | 0.039 in | Grey | FEMT2 | 1SNA113629R2700 | | 10 | 2.00 |
| 3 | **Lateral jumper bars** | 50 A | | Black | PC8-10 | 1SNA163313R2400 | | 10 | 14.00 |
| | | | | | PC8-R1 | 1SNA400711R0600 | | 10 | 6.60 |
| | | | | | PC8-R2 | 1SNA400712R0700 | | 10 | 7.84 |
| | | | | | PC8-R3 | 1SNA400713R0000 | | 10 | 9.00 |
| | | | | | PC8-R4 | 1SNA400724R0300 | | 10 | 4.50 |
| 4 | **Test sockets** | DIA 4 mm 0.157 in IP20 | | Black | AJS9-1 | 1SNA206680R1500 | | 25 | 3.60 |
| | | | | Green | AJS9-2 | 1SNA206681R0200 | | 25 | 3.60 |
| | | | | Grey | AJS9-3 | 1SNA206682R0300 | | 25 | 3.60 |
| | | | | Blue | AJS9-4 | 1SNA206683R0400 | | 25 | 3.60 |
| | | | | Red | AJS9-5 | 1SNA206720R1400 | | 25 | 3.60 |
| 5 | **Test plugs** | DIA 4 mm 0.157 in IP20 | | Red | FC4-1 | 1SNA167927R1000 | | 10 | 11.00 |
| 6 | **Short circuit bridges** | 2 poles | | Yellow | SC-JB8-2 | 1SNK900652R0000 | | 25 | 2.00 |
| | | 3 poles | | | SC-JB8-3 | 1SNK900653R0000 | | 25 | 3.40 |
| | | 4 poles | | | SC-JB8-4 | 1SNK900654R0000 | | 25 | 4.70 |
| 7 | **Terminal block markers** | Blank card | | White | RC810 | 1SNA234000R0200 | | 1 | 8.20 |

Complete list of accessories is indicated in the terminal block datasheet.
Some accessories such as jumper bars may modify the terminal block's ratings: complete information in the accessories catalogue pages.

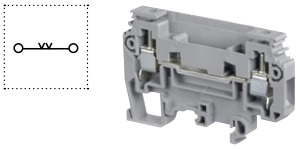

### Feed-through screw clamp terminal blocks

| Description | | Color | Type | Part Number | | Pkg pce | Weight (1 pce) g |
|---|---|---|---|---|---|---|---|
| **Feed-through** | Profile aligned with M6/8.ST... | Grey | M6/8.ST7 | 1SNA115243R2600 | | 25 | 20.00 |

Technical data valid for copper conductors only.

# M6/8.ST screw clamp terminal blocks
## Feed-through - 8 mm 0.315 in spacing

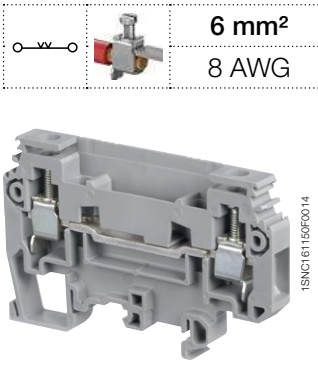


M6/8.ST

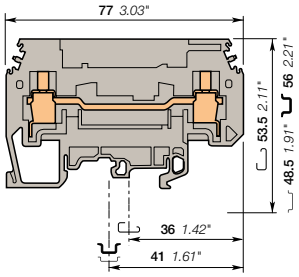


**8 mm** 0.315 in spacing

| | |
|---|---|
| | 6 mm² |
| | 8 AWG |

### Description

Profile aligned with M6/8 ST.

### Ordering details

| Description | Color | Type | Part Number | | Pkg pce | Weight (1 pce) g |
|---|---|---|---|---|---|---|
| Feed-through | Grey | M6/8.ST7 | 1SNA115243R2600 | | 25 | 20.00 |

### Main technical data

| | | IEC | UL | CSA |
|---|---|---|---|---|
| 1 conductor per clamp | Rigid - Solid / Stranded | 0.5-10 mm² | 18 - 8 AWG | 18-8 AWG |
| | Flexible | 0.5-6 mm² | | |
| | with insulated ferrule | | | |
| | Gauge | A5 | | |
| Rated current / Rated cross section | | 40 A / 6 mm² | 40 A / 8 AWG | 40 A / 8 AWG |
| Rated short-time withstand current (1s) | | 720 A | | |
| Rated voltage | | 630 V | 150 V | 150 V |
| Impulse withstand voltage | | | | |
| Protection | | | NEMA | |

### Mounting instructions

| | |
|---|---|
| Rail | G32, TH 35-7.5, TH 35-15 |
| Wire stripping length | 13 mm<br>0.51 in |
| Tool | Flat screwdriver<br>Ø 5 mm<br>Ø 0.197 in |
| Torque | 0.8 - 1 N.m<br>7.1 - 8.9 lb.in |

The connecting capacity data for one Rigid - Solid / Stranded - Flexible conductor (when applicable) is a mandatory information required by IEC, UL and CSA standards.
All other data are provided as supplementary information only. For more details, please consult our CB, UL or CSA certificates and technical datasheet available on http://www.te.com

CE RoHS USR CSA Gost R

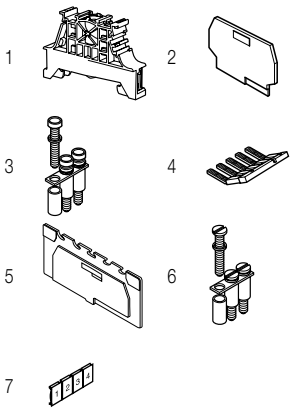


### Accessories

| | Description | | | Color | Type | Part Number | | Pkg pce | Weight (1 pce) g |
|---|---|---|---|---|---|---|---|---|---|
| 1 | End stops | 10 mm | 0.394 in | Grey | BAM4 | 1SNK900001R0000 | | 50 | 12.00 |
| | | 9 mm | 0.354 in | | BAZ1 | 1SNK900002R0000 | | 50 | 4.70 |
| 2 | End sections | 1 mm | 0.039 in | Grey | FEMT2 | 1SNA113629R2700 | | 10 | 2.00 |
| 3 | Jumper bars | 20 poles | 41 A | | BJS8-20 | 1SNA174789R0500 | | 5 | 3.20 |
| 4 | Lateral jumper bars | 2 poles | 50 A | Black | PC8-2 | 1SNA116538R1700 | | 10 | 3.00 |
| | | 3 poles | | | PC8-3 | 1SNA116539R1000 | | 10 | 4.00 |
| | | 4 poles | | | PC8-4 | 1SNA116540R2500 | | 10 | 6.00 |
| | | 10 poles | | | PC8-10 | 1SNA163313R2400 | | 10 | 14.00 |
| | | | | | PC8-R1 | 1SNA400711R0600 | | 10 | 6.60 |
| | | | | | PC8-R2 | 1SNA400712R0700 | | 10 | 7.84 |
| | | | | | PC8-R3 | 1SNA400713R0000 | | 10 | 9.00 |
| | | | | | PC8-R4 | 1SNA400724R0300 | | 10 | 4.50 |
| 5 | Circuit separators | 3 mm | 0.118 in | Grey | SCFT2 | 1SNA114522R0500 | | 20 | |
| 6 | Fastening kits | Sub assembly post + screw + washer | | | EV8S | 1SNA168401R0300 | | 20 | 3.00 |
| 7 | Terminal block markers | Blank card | | White | RC810 | 1SNA234000R0200 | | 1 | 8.20 |

Complete list of accessories is indicated in the terminal block datasheet.
Some accessories such as jumper bars may modify the terminal block's ratings: complete information in the accessories catalogue pages.

Technical data valid for copper conductors only.

# M4/8.SF screw clamp terminal blocks

For 5 x 20 and 5 x 25 fuses - 8 mm 0.315 in spacing

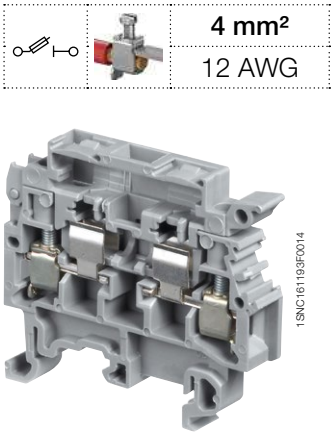

**4 mm²**
12 AWG




M4/8.SF

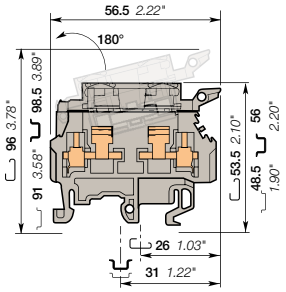


**8 mm** 0.315 in spacing

## Description

Protect your circuits with 5x20 and 5x25 fuse terminal blocks (fuse not supplied with terminal blocks).

## Ordering details

| Description | Color | Type | Part Number | | Pkg qty | Weight (1 pce) g |
|---|---|---|---|---|---|---|
| Fuse | Grey | M4/8.SF | 1SNA115657R2500 | | 50 | 14.00 |

## Main technical data

| Connecting capacity | | IEC | UL | CSA |
|---|---|---|---|---|
| 1 conductor per clamp | Rigid - Solid / Stranded | 0.5-6 mm² | 22-12 AWG | 24-12 AWG |
| | Flexible | 0.5-4 mm² | | |
| | with insulated ferrule | | | |
| | Gauge | A4 | | |
| Rated current / Rated cross section | | 6.3 A / 4 mm² | 15 A / 12 AWG | 10 A / 12 AWG |
| Rated short-time withstand current (1s) | | | | |
| Rated voltage | | 630 V | 600 V | 250 V |
| Impulse withstand voltage | | 8000 V | | |
| Protection | | IP20 | NEMA 1 | |

## Mounting instructions

| | |
|---|---|
| Rail | G32, TH 35-7.5, TH 35-15 |
| Wire stripping length | 9.5 mm 0.37 in |
| Tool | Flat screwdriver Ø 4 mm Ø 0.157 in |
| Torque | 0.5 - 0.8 N.m 4.4 - 7.1 lb.in |

The connecting capacity data for one Rigid - Solid / Stranded - Flexible conductor (when applicable) is a mandatory information required by IEC, UL and CSA standards.
All other data are provided as supplementary information only. For more details, please consult our CB, UL or CSA certificates and technical datasheet available on http://www.te.com

CE RoHS USR CSA Gost R

## Accessories

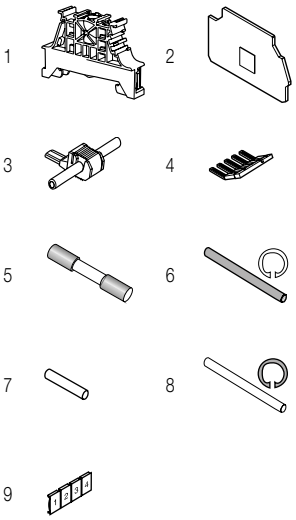


| | Description | | | Color | Type | Part Number | | Pkg qty | Weight (1 pce) g |
|---|---|---|---|---|---|---|---|---|---|
| 1 | End stops | 10 mm | 0.394 in | Grey | BAM4 | 1SNK900001R0000 | | 50 | 12.00 |
| | | 9 mm | 0.354 in | | BAZ1 | 1SNK900002R0000 | | 50 | 4.70 |
| 2 | End sections | 1.5 mm | 0.059 in | Grey | FEM8S | 1SNA116951R1500 | | 20 | 2.60 |
| 3 | Jumper bars | 1 poles | 24 A | Grey | AD2.5 | 1SNA114205R2000 | | 50 | 1.60 |
| 4 | Lateral jumper bars | 10 poles | 35 A | | PC81-10 | 1SNA173523R1100 | | 10 | 5.00 |
| 5 | Fuses | 0.5 A | | | FU520 | 1SNA008288R1500 | | 10 | |
| | | 3.15 A | | | | 1SNA008289R1600 | | 10 | |
| | | 1 A | | | | 1SNA008290R1300 | | 10 | |
| | | 2 A | | | | 1SNA008291R0000 | | 10 | |
| | | 5 A | | | | 1SNA008292R0100 | | 10 | |
| 6 | Assembly rods | 2 poles | | | TGA8 | 1SNA168672R1100 | | 10 | 1.00 |
| | | 3 poles | | | | 1SNA168673R1200 | | 10 | |
| | | 4 poles | | | | 1SNA168674R1300 | | 10 | |
| 7 | Neutral cartridges | | | | CN5 | 1SNA179371R1600 | | 10 | 3.90 |
| 8 | Spring retaining rings | | | | ANT | 1SNA168675R1400 | | 10 | |
| 9 | Terminal block markers | Blank card | | White | RC810 | 1SNA234000R0200 | | 10 | 8.20 |

Complete list of accessories is indicated in the terminal block datasheet.
Some accessories such as jumper bars may modify the terminal block's ratings: complete information in the accessories catalogue pages.

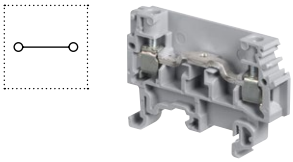

## Feed-through screw clamp terminal blocks

| Description | Color | Type | Part Number | | Pkg qty | Weight (1 pce) g |
|---|---|---|---|---|---|---|
| Feed-through | Grey | M4/8 | 1SNA115523R0700 | | 50 | 11.00 |

Technical data valid for copper conductors only.

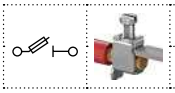

4 mm²
12 AWG

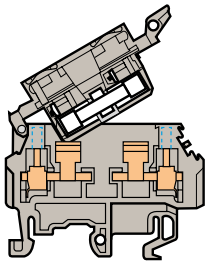

**8 mm** 0.315 in spacing

## Standard block

### Ordering details

| Description | Color | Type | Part Number | | Pkg qty | Weight (1 pce) g |
|---|---|---|---|---|---|---|
| Fuse | Orange | M4/8.SF2 | 1SNA105135R1100 | | 50 | 14.00 |

| Main technical data | IEC | UL | CSA | Nota |
|---|---|---|---|---|
| Rated voltage | 630 V | 600 V | | |
| Impulse withstand voltage | 8000 V | | | |
| Protection | IP20 | NEMA 1 | | |

CE RoHS USR Gost R



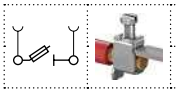

4 mm²
12 AWG

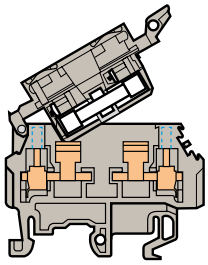

**8 mm** 0.315 in spacing

1

## With 2 test socket DIA 2 mm 0.079 in

### Ordering details

| Description | | Color | Type | Part Number | | Pkg qty | Weight (1 pce) g |
|---|---|---|---|---|---|---|---|
| Fuse | With 2 test socket DIA 2 mm 0.079 in | Grey | M4/8.SFT | 1SNA115662R2200 | | 50 | 14.00 |

| Main technical data | IEC | UL | CSA | Nota |
|---|---|---|---|---|
| Rated voltage | 400 V | 600 V | 250 V | |
| Impulse withstand voltage | 4000 V | | | |
| Protection | IP20 | NEMA 1 | | |

CE RoHS USR CSA Gost R

### Accessories

| | Description | | Color | Type | Part Number | | Pkg qty | Weight (1 pce) g |
|---|---|---|---|---|---|---|---|---|
| 1 | Test plugs | DIA 2 mm 0.079 in | Black | FC2 | 1SNA007865R2600 | | 100 | |

Technical data valid for copper conductors only.

1SNC161104S0201 - Rev. A

# M4/8.SF screw clamp terminal blocks

For 5x20 and 5x25 fuses - With blown fuse indicator - 8 mm 0.315 in spacing

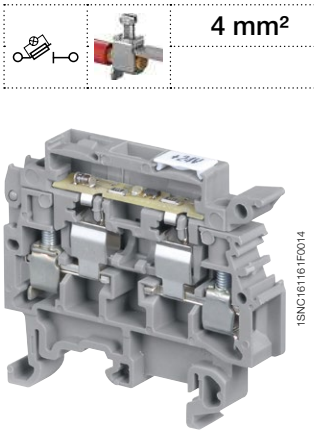


M4/8.SF

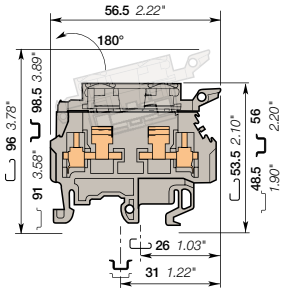


**8 mm** 0.315 in spacing

4 mm²

## Description

- Protect your circuits with 5x20 and 5x25 fuse terminal blocks (fuse not supplied with terminal blocks),
- Quickly identify the defective circuit thanks to the blown fuse indicator.

## Ordering details

| Description | | Color | Type | Part Number | | Pkg qty | Weight (1 pce) g |
|---|---|---|---|---|---|---|---|
| **Fuse** | With blown fuse indicator by LED 24-60 V DC/ 110 V AC | Grey | M4/8.SFD3 | 1SNA115935R0400 | | 50 | 14.00 |

## Main technical data

| Connecting capacity | | IEC | UL | CSA |
|---|---|---|---|---|
| **1 conductor per clamp** | Rigid - Solid / Stranded | 0.5-6 mm² | | |
| | Flexible | 0.5-4 mm² | | |
| | with insulated ferrule | | | |
| | Gauge | A4 | | |
| **Rated current / Rated cross section** | | 6.3 A / 4 mm² | | |
| **Rated short-time withstand current** (1s) | | | | |
| **Rated voltage** | | 400 V | | |
| **Impulse withstand voltage** | | 4000 V | | |
| **Protection** | | IP20 | NEMA 1 | |

## Mounting instructions

| | |
|---|---|
| Rail | G32, TH 35-7.5, TH 35-15 |
| Wire stripping length | 9.5 mm 0.374 in |
| Tool | Flat screwdriver Ø 4 mm Ø 0.157 in |
| Torque | 0.5 - 0.8 N.m 4.4 - 7.1 lb.in |

The connecting capacity data for one Rigid - Solid / Stranded - Flexible conductor (when applicable) is a mandatory information required by IEC, UL and CSA standards.
All other data are provided as supplementary information only. For more details, please consult our CB, UL or CSA certificates and technical datasheet available on http://www.te.com

CE RoHS Gost R

## Notes

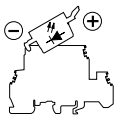

Blocks with LED indicator are labeled "+" on the outside of the lever. The indicator can be reversed in the field if required.
Leakage current : 24 V : < 0.5 mA / 110 V : < 2.2 mA

## Accessories

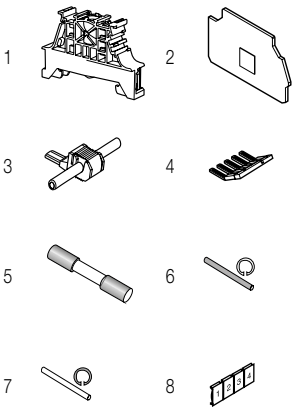


| | Description | | | Color | Type | Part Number | | Pkg qty | Weight (1 pce) g |
|---|---|---|---|---|---|---|---|---|---|
| 1 | **End stops** | 10 mm | 0.394 in | Grey | BAM4 | 1SNK900001R0000 | | 50 | 12.00 |
| | | 9 mm | 0.354 in | | BAZ1 | 1SNK900002R0000 | | 50 | 4.70 |
| 2 | **End sections** | 1.5 mm | 0.059 in | Grey | FEM8S | 1SNA116951R1500 | | 20 | 2.60 |
| 3 | **Jumper bars** | 1 poles | 24 A | Grey | AD2.5 | 1SNA114205R2000 | | 50 | 1.60 |
| 4 | **Lateral jumper bars** | 10 poles | 35 A | | PC81-10 | 1SNA173523R1100 | | 10 | 5.00 |
| 5 | **Fuses** | 0.5 A | | | FU520 | 1SNA008288R1500 | | 10 | |
| | | 3.15 A | | | | 1SNA008289R1600 | | 10 | |
| | | 1 A | | | | 1SNA008290R1300 | | 10 | |
| | | 2 A | | | | 1SNA008291R0000 | | 10 | |
| | | 5 A | | | | 1SNA008292R0100 | | 10 | |
| 6 | **Assembly rods** | 2 poles | | | TGA8 | 1SNA168672R1100 | | 10 | 1.00 |
| | | 3 poles | | | | 1SNA168673R1200 | | 10 | |
| | | 4 poles | | | | 1SNA168674R1300 | | 10 | |
| 7 | **Spring retaining rings** | | | | ANT | 1SNA168675R1400 | | 10 | |
| 8 | **Terminal block markers** | Blank card | | White | RC810 | 1SNA234000R0200 | | 1 | 8.20 |

Complete list of accessories is indicated in the terminal block datasheet.
Some accessories such as jumper bars may modify the terminal block's ratings: complete information in the accessories catalogue pages.

Technical data valid for copper conductors only.

1SNC161075S0201 - Rev. B

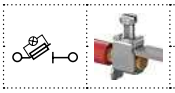

4 mm²
12 AWG

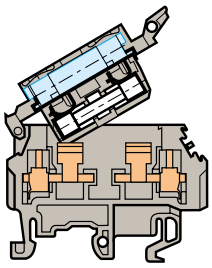

**8 mm** 0.315 in spacing

## With blown fuse indicator

### Ordering details

| Description | | Color | Type | Part Number | | Pkg qty | Weight (1 pce) g |
|---|---|---|---|---|---|---|---|
| Fuse | With blown fuse indicator by neon 110-230 V AC | Grey | M4/8.SFL | 1SNA115661R2100 | | 50 | 14.00 |
| | With blown fuse indicator by LED 24 V AC/DC | Grey | M4/8.SFD | 1SNA115663R2300 | | 50 | 14.00 |

| Main technical data | IEC | UL | CSA |
|---|---|---|---|
| Rated voltage | 400 V | 600 V | 250 V |
| Impulse withstand voltage | 4000 V | | |
| Protection | IP20 | NEMA 1 | |

Leakage current :
24 V : < 4.5 mA
110 V : < 0.5 mA
230 V : < 0.7 mA

CE RoHS USR cCSAus Gost R



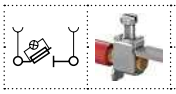

4 mm²
12 AWG

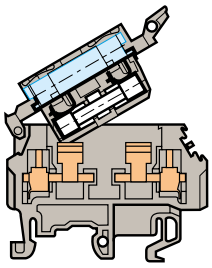

**8 mm** 0.315 in spacing

## With blown fuse indicator and 2 test socket DIA 2 mm 0.079 in

### Ordering details

| Description | | Color | Type | Part Number | | Pkg qty | Weight (1 pce) g |
|---|---|---|---|---|---|---|---|
| Fuse | With blown fuse indicator by LED 24 V AC/DC and 2 test socket DIA 2 mm 0.079 in | Grey | M4/8.SFDT | 1SNA115665R2500 | | 50 | 14.00 |
| | With blown fuse indicator by neon 110-230 V AC and 2 test socket DIA 2 mm 0.079 in | Grey | M4/8.SFLT | 1SNA115667R2700 | | 50 | 14.00 |

| Main technical data | IEC | UL | CSA |
|---|---|---|---|
| Rated voltage | 400 V | 600 V | 250 V |
| Impulse withstand voltage | 4000 V | | |
| Protection | IP20 | NEMA 1 | |

Leakage current :
24 V : < 4.5 mA
110 V : < 0.5 mA
230 V : < 0.7 mA

CE RoHS USR CSA Gost R

### Accessories

| | Description | | Color | Type | Part Number | | Pkg qty | Weight (1 pce) g |
|---|---|---|---|---|---|---|---|---|
| 1 | Test plugs | DIA 2 mm 0.079 in | Black | FC2 | 1SNA007865R2600 | | 100 | |

1

Technical data valid for copper conductors only.

1SNC161105S0201 - Rev. A

# M4/8.SN screw clamp terminal blocks

## Disconnect with lever - with test socket - 8 mm 0.315 in spacing

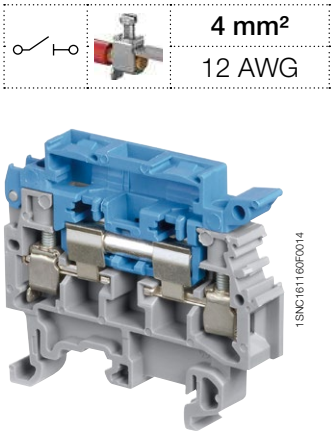

| | |
|---|---|
| 4 mm² | |
| 12 AWG | |




M4/8.SN

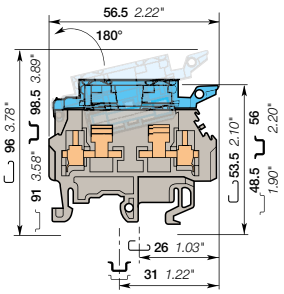


**8 mm** 0.315 in spacing

### Description

- Simplify the disconnect operations for the disconnect terminal blocks installed next to fuse terminal blocks M4/8.SF...,
- With the same profile as M4/8.SF, the M4/8.SN disconnect lever is easily operated by hand and the wiring of the alternated disconnect and fuse circuits is easier,
- Link bar for lever included in terminal.

### Ordering details

| Description | | Color | Type | Part Number | | Pkg qty | Weight (1 pce) g |
|---|---|---|---|---|---|---|---|
| **Disconnect** | | Grey, blue | M4/8.SN | 1SNA115659R0700 | | 50 | 13.00 |
| **Disconnect** | with 2 test socket DIA 2 mm 0.079 in | Grey, blue | M4/8.SNT | 1SNA115668R0000 | | 50 | 13.00 |

### Main technical data

| Connecting capacity | | IEC | UL | CSA |
|---|---|---|---|---|
| **1 conductor per clamp** | Rigid - Solid / Stranded | 0.5-6 mm² | 22-12 AWG | 24-12 AWG |
| | Flexible | 0.5-4 mm² | | |
| | with insulated ferrule | | | |
| | Gauge | A4 | | |
| **Rated current / Rated cross section** | | 6.3 A / 4 mm² | 15 A / 12 AWG | 10 A / 12 AWG |
| **Rated short-time withstand current** (1s) | | 90 A | | |
| **Rated voltage** | | 630 V | 600 V | 250 V |
| **Impulse withstand voltage** | | 8000 V | | |
| **Protection** | | IP20 | NEMA 1 | |

### Mounting instructions

| | |
|---|---|
| Rail | G32, TH 35-7.5, TH 35-15 |
| Wire stripping length | 9.5 mm<br>0.37 in |
| Tool | Flat screwdriver<br>Ø 4 mm<br>Ø 0.157 in |
| Torque | 0.5 - 0.8 N.m<br>4.4 - 7.1 lb.in |

The connecting capacity data for one Rigid - Solid / Stranded - Flexible conductor (when applicable) is a mandatory information required by IEC, UL and CSA standards.
All other data are provided as supplementary information only. For more details, please consult our CB, UL or CSA certificates and technical datasheet available on http://www.te.com

CE RoHS USR CSA Gost R

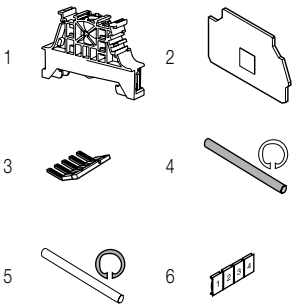


### Accessories

| | Description | | | Color | Type | Part Number | | Pkg qty | Weight (1 pce) g |
|---|---|---|---|---|---|---|---|---|---|
| 1 | **End stops** | 10 mm | 0.394 in | Grey | BAM4 | 1SNK900001R0000 | | 50 | 12.00 |
| | | 9 mm | 0.354 in | | BAZ1 | 1SNK900002R0000 | | 50 | 4.70 |
| 2 | **End sections** | 1.5 mm | 0.059 in | Grey | FEM8S | 1SNA116951R1500 | | 20 | 2.60 |
| 3 | **Lateral jumper bars** | 10 poles | 35 A | | PC81-10 | 1SNA173523R1100 | | 10 | 5.00 |
| 4 | **Assembly rods** | 2 poles | | | TGA8 | 1SNA168672R1100 | | 10 | 1.00 |
| | | 3 poles | | | | 1SNA168673R1200 | | 10 | |
| | | 4 poles | | | | 1SNA168674R1300 | | 10 | |
| 5 | **Spring retaining rings** | | | | ANT | 1SNA168675R1400 | | 10 | |
| 6 | **Terminal block markers** Blank card | | | White | RC810 | 1SNA234000R0200 | | 1 | 8.20 |

Complete list of accessories is indicated in the terminal block datasheet.
Some accessories such as jumper bars may modify the terminal block's ratings: complete information in the accessories catalogue pages.

Technical data valid for copper conductors only.

# M4/8 screw clamp terminal blocks

## Feed-Through - 8 mm 0.315 in spacing

4 mm²

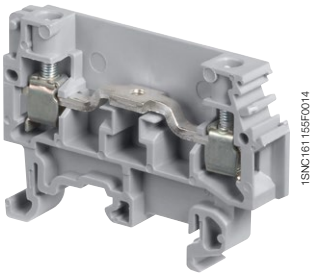


M4/8

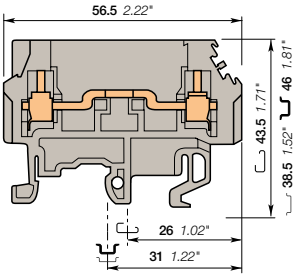


**8 mm** 0.315 in spacing

### Description

- Simplify the alternated feed-through and fuse circuits operations,
- With the same profile as M4/8.SF, the wiring of the alternated feed-through and fuse circuits is easier.

### Ordering details

| Description | Color | Type | Part Number | | Pkg qty | Weight (1 pce) g |
|---|---|---|---|---|---|---|
| Feed-Through | Grey | M4/8 | 1SNA115523R0700 | | 50 | 11.00 |

### Main technical data

| Connecting capacity | | IEC | UL | CSA |
|---|---|---|---|---|
| 1 conductor per clamp | Rigid - Solid / Stranded | 0.2-4 mm² | | |
| | Flexible | 0.22-4 mm² | | |
| | with insulated ferrule | | | |
| | Gauge | A4 | | |
| | | | | |
| | | | | |
| | | | | |
| Rated current / Rated cross section | | 26 A / 4 mm² | | |
| Rated short-time withstand current (1s) | | 480 A | | |
| Rated voltage | | 500 V | | |
| Impulse withstand voltage | | | | |
| Protection | | | NEMA | |

### Mounting instructions

| | | |
|---|---|---|
| Rail | | G32, TH 35-7.5, TH 35-15 |
| Wire stripping length | | 9.5 mm<br>0.37 in |
| Tool | | Flat screwdriver<br>Ø 4 mm<br>Ø 0.157 in |
| Torque | | 0.5 - 0.8 N.m<br>4.4 - 7.1 lb.in |

The connecting capacity data for one Rigid - Solid / Stranded - Flexible conductor (when applicable) is a mandatory information required by IEC, UL and CSA standards.
All other data are provided as supplementary information only. for more details, please consult our CB, UL or CSA certificates and technical datasheet available on http://www.te.com

CE RoHS Gost R

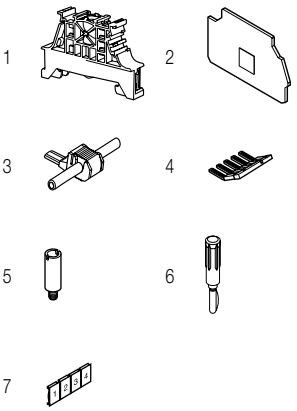


### Accessories

| | Description | | | Color | Type | Part Number | | Pkg qty | Weight (1 pce) g |
|---|---|---|---|---|---|---|---|---|---|
| 1 | End stops | 10 mm | 0.394 in | Grey | BAM4 | 1SNK900001R0000 | | 50 | 12.00 |
| | | 9 mm | 0.354 in | | BAZ1 | 1SNK900002R0000 | | 50 | 4.70 |
| 2 | End sections | 1.5 mm | 0.059 in | Grey | FEM8S | 1SNA116951R1500 | | 20 | 2.60 |
| 3 | Jumper bars | 1 poles | 24 A | Grey | AD2.5 | 1SNA114205R2000 | | 50 | 1.60 |
| 4 | Lateral jumper bars | 10 poles | 35 A | | PC81-10 | 1SNA173523R1100 | | 10 | 5.00 |
| 5 | Test sockets | DIA 2 mm | 0.079 in | | AL2 | 1SNA163070R0000 | | 50 | |
| | | DIA 3 mm | 0.120 in | | AL3 | 1SNA163261R0000 | | 50 | 1.20 |
| 6 | Test plugs | DIA 2 mm | 0.079 in | Black | FC2 | 1SNA007865R2600 | | 100 | |
| 7 | Terminal block markers | Blank card | | White | RC810 | 1SNA234000R0200 | | 1 | 8.20 |

Complete list of accessories is indicated in the terminal block datasheet.
Some accessories such as jumper bars may modify the terminal block's ratings: complete information in the accessories catalogue pages.

Technical data valid for copper conductors only.

1SNC161077S0201 - Rev. B

# M4/8.D2.SF screw clamp terminal blocks

## For 5 x 20 and 5 x 25 fuses - 8 mm 0.315 in spacing

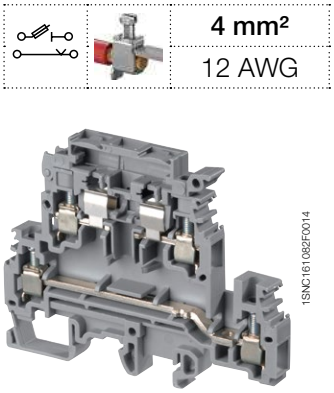

| | |
|---|---|
| 4 mm² | |
| 12 AWG | |




M4/8.D2.SF

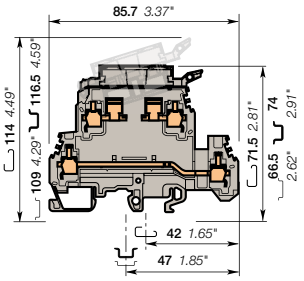


**8 mm** 0.315 in spacing

### Description

- Protect your circuits with 5x20 and 5x25 fuse terminal blocks (fuse not supplied with terminal blocks),
- Save space with double deck terminal blocks: 2 independent circuits 1 fuse on upper deck + 1 feed-through.

### Ordering details

| Description | Color | Type | Part Number | | Pkg qty | Weight (1 pce) g |
|---|---|---|---|---|---|---|
| Fuse | Grey | M4/8.D2.SF | 1SNA115604R2100 | | 50 | 26.00 |

### Main technical data

| Connecting capacity | | IEC | UL | CSA |
|---|---|---|---|---|
| 1 conductor per clamp | Rigid - Solid / Stranded | 0.5-6 mm² | 24-12 AWG | 24-12 AWG |
| | Flexible | 0.5-4 mm² | | |
| | with insulated ferrule | | | |
| | Gauge | A4 | | |
| | | | | |
| | | | | |
| Rated current / Rated cross section | | 6.3 A / 4 mm² | 20 A / 12 AWG | 10 A / 12 AWG |
| Rated short-time withstand current (1s) | | | | |
| Rated voltage | | 630 V | 300 V | 250 V |
| Impulse withstand voltage | | 8000 V | | |
| Protection | | IP20 | NEMA 1 | |

### Mounting instructions

| | |
|---|---|
| Rail | G32, TH 35-7.5, TH 35-15 |
| Wire stripping length | 9.5 mm<br>0.37 in |
| Tool | Flat screwdriver<br>Ø 4 mm<br>Ø 0.157 in |
| Torque | 0.5 - 0.8 N.m<br>4.4 - 7.1 lb.in |

The connecting capacity data for one Rigid - Solid / Stranded - Flexible conductor (when applicable) is a mandatory information required by IEC, UL and CSA standards.
All other data are provided as supplementary information only. For more details, please consult our CB, UL or CSA certificates and technical datasheet available on http://www.te.com

CE | RoHS | USR CNR | CSA | Gost R

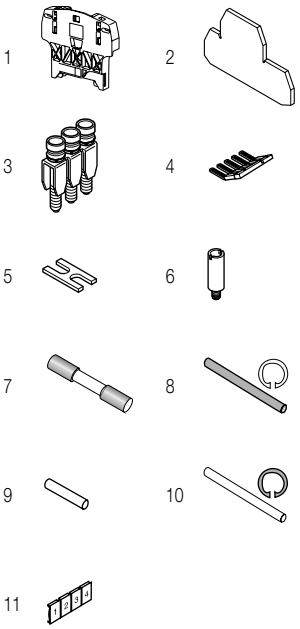


### Accessories

| | Description | | | Color | Type | Part Number | | Pkg qty | Weight (1 pce) g |
|---|---|---|---|---|---|---|---|---|---|
| 1 | End stops | 12 mm | 0.472 in | Grey | BAZH1 | 1SNK900102R0000 | | 50 | 24.00 |
| 2 | End sections | 1.5 mm | 0.059 in | Grey | FEM8D2S | 1SNA116913R0700 | | 20 | 10.00 |
| 3 | Jumper bars | 2 poles | 41 A | | BJMI8-2 | 1SNA176669R1600 | | 10 | 4.50 |
| | | 3 poles | | | BJMI8-3 | 1SNA176670R1300 | | 10 | 6.00 |
| | | 4 poles | | | BJMI8-4 | 1SNA176671R0000 | | 10 | 10.00 |
| | | 10 poles | | | BJMI8-10 | 1SNA176673R0200 | | 10 | 20.00 |
| 4 | Lateral jumper bars | 10 poles | 35 A | | PC81-10 | 1SNA173523R1100 | | 10 | 5.00 |
| 5 | Cross spacing jumpers | 5 mm 0.200 in - 6 mm 0.236 in - 8 mm 0.315 in | | | EL6 | 1SNA173627R2100 | | 10 | 0.10 |
| 6 | Test sockets | DIA 2 mm 0.079 in | | | AL2 | 1SNA163043R2100 | | 50 | 0.90 |
| | | DIA 3 mm 0.120 in | | | AL3 | 1SNA163261R0000 | | 50 | 1.20 |
| | | DIA 4 mm 0.157 in | | | AL4-M3 | 1SNA206721R0100 | | 50 | 1.10 |
| 7 | Fuses | 0.5 A | | | FU520 | 1SNA008288R1500 | | 10 | |
| | | 1 A | | | | 1SNA008290R1300 | | 10 | |
| | | 2 A | | | | 1SNA008291R0000 | | 10 | |
| 8 | Assembly rods | 2 poles | | | TGA8 | 1SNA168672R1100 | | 10 | 1.00 |
| | | 3 poles | | | | 1SNA168673R1200 | | 10 | |
| | | 4 poles | | | | 1SNA168674R1300 | | 10 | |
| 9 | Neutral cartridges | | | | CN5 | 1SNA179371R1600 | | 10 | 3.90 |
| 10 | Spring retaining rings | | | | ANT | 1SNA168675R1400 | | 10 | |
| 11 | Terminal block markers | Blank card | | White | RC810 | 1SNA234000R0200 | | 1 | 8.20 |

Complete list of accessories is indicated in the terminal block datasheet.
Some accessories such as jumper bars may modify the terminal block's ratings: complete information in the accessories catalogue pages.

Technical data valid for copper conductors only.

1SNC161112S0201 - Rev. B

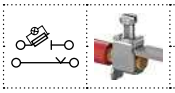

4 mm²

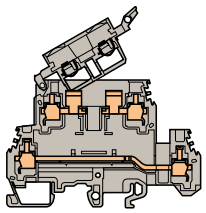

**8 mm** 0.315 in spacing

# With blown fuse indicator by LED

### Ordering details

| Description | | Color | Type | Part Number | | Pkg qty | Weight (1 pce) g |
|---|---|---|---|---|---|---|---|
| Fuse | With blown fuse indicator by LED 24-60 V DC / 110 V AC | Grey | M4/8.D2.SFD3 | 1SNA115936R0500 | | 50 | 30.00 |

| Main technical data | IEC | UL | CSA |
|---|---|---|---|
| Rated voltage | 500 V | | |
| Impulse withstand voltage | 6000 V | | |
| Protection | IP20 | NEMA 1 | |

Leakage current :
24 V : < 0.5 mA
110 V : < 2.2 mA

CE, RoHS, Gost R



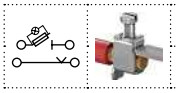

4 mm²
12 AWG

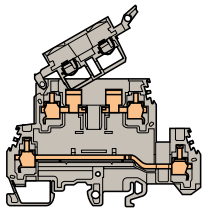

**8 mm** 0.315 in spacing

# With blown fuse indicator by neon

### Ordering details

| Description | | Color | Type | Part Number | | Pkg qty | Weight (1 pce) g |
|---|---|---|---|---|---|---|---|
| Fuse | With blown fuse indicator by neon 110-230 V AC | Grey | M4/8.D2.SFL | 1SNA115646R2200 | | 50 | 30.00 |

| Main technical data | IEC | UL | CSA |
|---|---|---|---|
| Rated voltage | 500 V | 300 V | 250 V |
| Impulse withstand voltage | 6000 V | | |
| Protection | IP20 | NEMA 1 | |

Leakage current :
110 V : < 0.5 mA
230 V : < 0.7 mA

CE, RoHS, USR CNR, CSA, Gost R

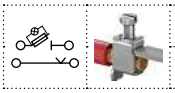

4 mm²
12 AWG

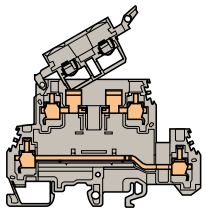

**8 mm** 0.315 in spacing

# With blown fuse indicator

### Ordering details

| Description | | Color | Type | Part Number | | Pkg qty | Weight (1 pce) g |
|---|---|---|---|---|---|---|---|
| Fuse | With blown fuse indicator by LED 24 V AC/DC | Grey | M4/8.D2.SFD | 1SNA115647R2300 | | 50 | 30.00 |

| Main technical data | IEC | UL | CSA |
|---|---|---|---|
| Rated voltage | 500 V | | 250 V |
| Impulse withstand voltage | 6000 V | | |
| Protection | IP20 | NEMA 1 | |

Leakage current :
24 V : < 4.5 mA

CE, RoHS, CSA, Gost R

Technical data valid for copper conductors only.

1SNC161106S0201 - Rev. A

# D4/8.D2.P.SF screw clamp terminal blocks

For 5 x 20 and 5 x 25 fuses - 8 mm 0.315 in spacing

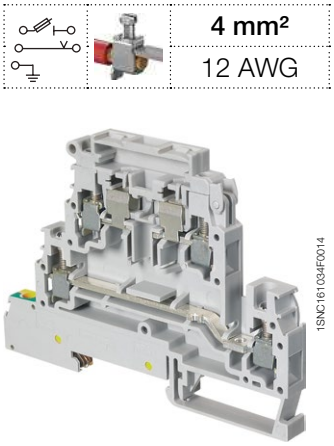

| | |
|---|---|
| 4 mm² | |
| 12 AWG | |



1SNC161034F0014

D4/8.D2.P.SF

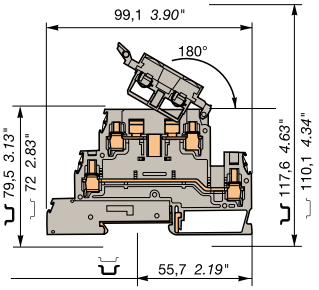


**8 mm** 0.315 in spacing

## Description

- Protect your circuits with 5x20 and 5x25 fuse terminal blocks (fuse not supplied with terminal blocks),
- Save space with double deck terminal blocks: 2 independent circuits 1 fuse on upper deck + 1 feed-through + 1 ground.

## Ordering details

| Description | Color | Type | Part Number | | Pkg qty | Weight (1 pce) g |
|---|---|---|---|---|---|---|
| Fuse | Grey | D4/8.D2.P.SF | 1SNA400270R2000 | | 25 | 35.00 |

## Main technical data

| Connecting capacity | | IEC | UL | CSA |
|---|---|---|---|---|
| 1 conductor per clamp | Rigid - Solid / Stranded | 0.5-6 mm² | 20-12 AWG | 20-12 AWG |
| | Flexible | 0.5-4 mm² | | |
| | with insulated ferrule | | | |
| | Gauge | A4 | | |
| Rated current / Rated cross section | | 6.3 A / 4 mm² | 6.3 A / 12 AWG | 6.3 A / 12 AWG |
| Rated short-time withstand current (1s) | | | | |
| Rated voltage | | 300 V | 300 V | 300 V |
| Impulse withstand voltage | | 6000 V | | |
| Protection | | IP20 | NEMA 1 | |

The connecting capacity data for one Rigid - Solid / Stranded - Flexible conductor (when applicable) is a mandatory information required by IEC, UL and CSA standards.
All other data are provided as supplementary information only. For more details, please consult our CB, UL or CSA certificates and technical datasheet available on http://www.te.com

CE RoHS USR CSA Gost R

## Mounting instructions

| | |
|---|---|
| Rail | TH 35-7.5, TH 35-15 |
| Wire stripping length | 9.5 mm 0.37 in |
| Tool | Flat screwdriver Ø 4 mm Ø 0.157 in |
| Torque | 0.5 - 0.8 N.m 4.4 - 7.1 lb.in |

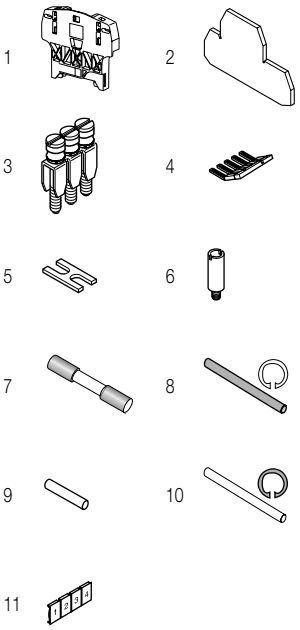


## Accessories

| | Description | | | Color | Type | Part Number | | Pkg qty | Weight (1 pce) g |
|---|---|---|---|---|---|---|---|---|---|
| 1 | End stops | 12 mm | 0.472 in | Grey | BAZH1 | 1SNK900102R0000 | | 50 | 24.00 |
| 2 | End sections | 1.5 mm | 0.059 in | Grey | FEM8D2S1 | 1SNA400273R1700 | | 20 | 4.60 |
| 3 | Jumper bars | 2 poles | 41 A | | BJM8 | 1SNA168520R0500 | | 10 | 5.00 |
| | | 3 poles | | | | 1SNA168521R2200 | | 10 | 7.00 |
| | | 4 poles | | | | 1SNA168522R2300 | | 10 | 9.50 |
| | | 10 poles | | | | 1SNA168974R0000 | | 10 | 23.70 |
| 4 | Lateral jumper bars | 10 poles | 35 A | | PC81-10 | 1SNA173523R1100 | | 10 | 5.00 |
| 5 | Cross spacing jumpers | 5 mm 0.200 in - 6 mm 0.236 in - 8 mm 0.315 in | | | EL6 | 1SNA173627R2100 | | 10 | 0.10 |
| 6 | Test sockets | DIA 2 mm 0.079 in | | | AL2 | 1SNA163043R2100 | | 50 | 0.90 |
| | | DIA 4 mm 0.157 in | | | AL4-M3 | 1SNA206721R0100 | | 50 | 1.10 |
| 7 | Fuses | 0.5 A | | | FU520 | 1SNA008288R1500 | | 10 | |
| | | 1 A | | | | 1SNA008290R1300 | | 10 | |
| | | 2 A | | | | 1SNA008291R0000 | | 10 | |
| 8 | Assembly rods | 2 poles | | | TGA8 | 1SNA168672R1100 | | 10 | 1.00 |
| | | 3 poles | | | | 1SNA168673R1200 | | 10 | |
| | | 4 poles | | | | 1SNA168674R1300 | | 10 | |
| 9 | Neutral cartridges | | | | CN5 | 1SNA179371R1600 | | 10 | 3.90 |
| 10 | Spring retaining rings | | | | ANT | 1SNA168675R1400 | | 10 | |
| 11 | Terminal block markers | Blank card | | White | RC810 | 1SNA234000R0200 | | 1 | 8.20 |

Complete list of accessories is indicated in the terminal block datasheet.
Some accessories such as jumper bars may modify the terminal block's ratings: complete information in the accessories catalogue pages.

Technical data valid for copper conductors only.

1SNC161078S0201 - Rev. B

# D4/8.D2.P.SF screw clamp terminal blocks

## For 5 x 20 and 5 x 25 fuses - with blown fuse indicator - 8 mm 0.315 in spacing

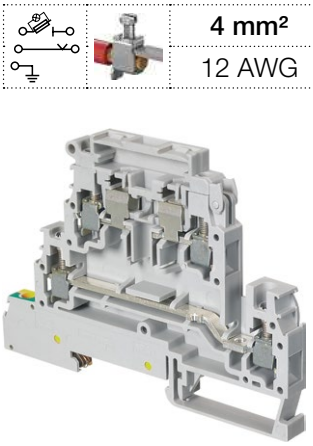

| | |
|---|---|
| 4 mm² | |
| 12 AWG | |



1SNC161034F0014

D4/8.D2.P.SF

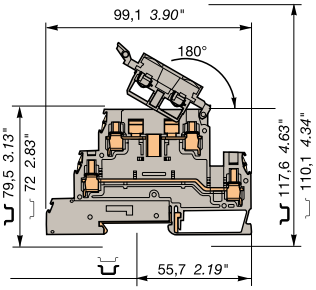


**8 mm** 0.315 in spacing

## Description

- Protect your circuits with 5x20 and 5x25 fuse terminal blocks (fuse not supplied with terminal blocks),
- Save space with double deck terminal blocks: 2 independent circuits 1 fuse on upper deck + 1 feed-through + 1 ground,
- Quickly identify the defective circuit thanks to the blown fuse indicator.

## Ordering details

| Description | | Color | Type | Part Number | | Pkg qty | Weight (1 pce) g |
|---|---|---|---|---|---|---|---|
| **Fuse** | With blown fuse indicator by neon 110-230 V AC | Grey | D4/8.D2.P.SFL | 1SNA400271R1500 | | 25 | 35.00 |
| | With blown fuse indicator by LED 24-60 V DC / 110 V AC | Grey | D4/8.D2.P.SFD | 1SNA400272R1600 | | 25 | 35.00 |

## Main technical data

| Connecting capacity | | IEC | UL | CSA |
|---|---|---|---|---|
| **1 conductor per clamp** | Rigid - Solid / Stranded | 0.5-6 mm² | 20-12 AWG | 20-12 AWG |
| | Flexible | 0.5-4 mm² | | |
| | with insulated ferrule | | | |
| | Gauge | A4 | | |
| **Rated current / Rated cross section** | | 6.3 A / 4 mm² | 6.3 A / 12 AWG | 6.3 A / 12 AWG |
| **Rated short-time withstand current** (1s) | | | | |
| **Rated voltage** | | 300 V | 300 V | 300 V |
| **Impulse withstand voltage** | | 6000 V | | |
| **Protection** | | IP20 | NEMA 1 | |

The connecting capacity data for one Rigid - Solid / Stranded - Flexible conductor (when applicable) is a mandatory information required by IEC, UL and CSA standards.
All other data are provided as supplementary information only. For more details, please consult our CB, UL or CSA certificates and technical datasheet available on http://www.te.com

CE RoHS USR CSA Gost R

## Mounting instructions

| | |
|---|---|
| Rail | TH 35-7.5, TH 35-15 |
| Wire stripping length | 9.5 mm 0.37 in |
| Tool | Flat screwdriver Ø 4 mm Ø 0.157 in |
| Torque | 0.5 - 0.8 N.m 4.4 - 7.1 lb.in |

## Notes

Blocks with LED indicator are labeled "+" on the outside of the lever. The indicator can be reversed in the field if required.
Leakage current D4/8.D2.P.SFL : 110 V : < 0.5 mA / 230 V : < 0.7 mA
Leakage current D4/8.D2.P.SFD : 24 V : < 0.5 mA / 110 V : < 2.2 mA

## Accessories

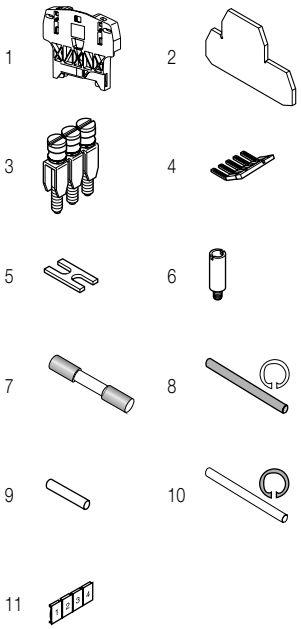


| | Description | | | Color | Type | Part Number | | Pkg qty | Weight (1 pce) g |
|---|---|---|---|---|---|---|---|---|---|
| 1 | **End stops** | 12 mm | 0.472 in | Grey | BAZH1 | 1SNK900102R0000 | | 50 | 24.00 |
| 2 | **End sections** | 1.5 mm | 0.059 in | Grey | FEM8D2S1 | 1SNA400273R1700 | | 20 | 4.60 |
| 3 | **Jumper bars** | 2 poles | 41 A | | BJM8 | 1SNA168520R0500 | | 10 | 5.00 |
| | | 3 poles | | | | 1SNA168521R2200 | | 10 | 7.00 |
| | | 4 poles | | | | 1SNA168522R2300 | | 10 | 9.50 |
| | | 10 poles | | | | 1SNA168974R0000 | | 10 | 23.70 |
| 4 | **Lateral jumper bars** | 10 poles | 35 A | | PC81-10 | 1SNA173523R1100 | | 10 | 5.00 |
| 5 | **Cross spacing jumpers** | 5 mm 0.200 in - 6 mm 0.236 in - 8 mm 0.315 in | | | EL6 | 1SNA173627R2100 | | 10 | 0.10 |
| 6 | **Test sockets** | DIA 2 mm 0.079 in | | | AL2 | 1SNA163043R2100 | | 50 | 0.90 |
| | | DIA 4 mm 0.157 in | | | AL4-M3 | 1SNA206721R0100 | | 50 | 1.10 |
| 7 | **Fuses** | 0.5 A | | | FU520 | 1SNA008288R1500 | | 10 | |
| | | 1 A | | | | 1SNA008290R1300 | | 10 | |
| | | 2 A | | | | 1SNA008291R0000 | | 10 | |
| 8 | **Assembly rods** | 2 poles | | | TGA8 | 1SNA168672R1100 | | 10 | 1.00 |
| | | 3 poles | | | | 1SNA168673R1200 | | 10 | |
| | | 4 poles | | | | 1SNA168674R1300 | | 10 | |
| 9 | **Neutral cartridges** | | | | CN5 | 1SNA179371R1600 | | 10 | 3.90 |
| 10 | **Spring retaining rings** | | | | ANT | 1SNA168675R1400 | | 10 | |
| 11 | **Terminal block markers** | Blank card | | White | RC810 | 1SNA234000R0200 | | 1 | 8.20 |

Complete list of accessories is indicated in the terminal block datasheet.
Some accessories such as jumper bars may modify the terminal block's ratings: complete information in the accessories catalogue pages.

Technical data valid for copper conductors only.



1SNC161081S0201 - Rev. B

# ML10/13.SF screw clamp terminal blocks

For 6.3 x 25 and 6.3 x 32 fuses - 13 mm 0.512 in spacing

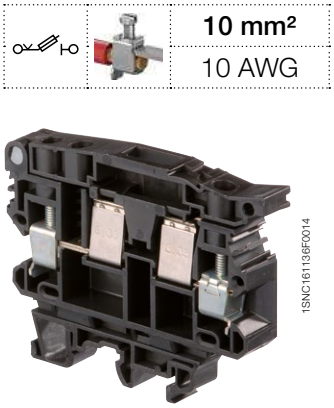

| | |
|---|---|
| 10 mm² | |
| 10 AWG | |



1SNC161136F0014

ML10/13.SF

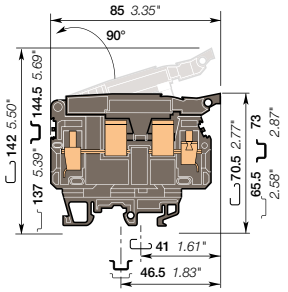


**13 mm** 0.512 in spacing

## Description

Protect your circuits with 6.35 x 25.4 mm (¼ x 1 in) and 6.35 x 32 mm (¼ x 1¼ in) fuse terminal blocks (fuse not supplied with terminal blocks).

## Ordering details

| Description | Color | Type | Part Number | | Pkg qty | Weight (1 pce) g |
|---|---|---|---|---|---|---|
| Fuse | Black | ML10/13.SF | 1SNA199095R1300 | | 20 | 51.00 |

## Main technical data

| Connecting capacity | | IEC | UL | CSA |
|---|---|---|---|---|
| 1 conductor per clamp | Rigid - Solid / Stranded | 0.5-16 mm² | 22-10 AWG | 22-8 AWG |
| | Flexible | 0.5-10 mm² | | |
| | with insulated ferrule | | | |
| | Gauge | A6 | | |
| | | | | |
| | | | | |
| Rated current / Rated cross section | | 16 A / 10 mm² | 25 A / 10 AWG | 25 A / 8 AWG |
| Rated short-time withstand current (1s) | | | | |
| Rated voltage | | 800 V | 600 V | 600 V |
| Impulse withstand voltage | | 8000 V | | |
| Protection | | | NEMA | |

The connecting capacity data for one Rigid - Solid / Stranded - Flexible conductor (when applicable) is a mandatory information required by IEC, UL and CSA standards.
All other data are provided as supplementary information only. For more details, please consult our CB, UL or CSA certificates and technical datasheet available on http://www.te.com

CE RoHS USR CSA Gost R

## Mounting instructions

| | |
|---|---|
| Rail | G32, TH 35-7.5, TH 35-15 |
| Wire stripping length | 12 mm<br>0.472 in |
| Tool | Flat screwdriver<br>Ø 5.5 mm<br>Ø 0.217 in |
| Torque | 1.2 - 1.4 N.m<br>10.6 - 12.3 lb.in |

## Notes

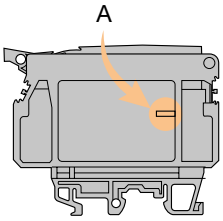


A: Use of the BJS requires the user to cut out the partition.

## Accessories

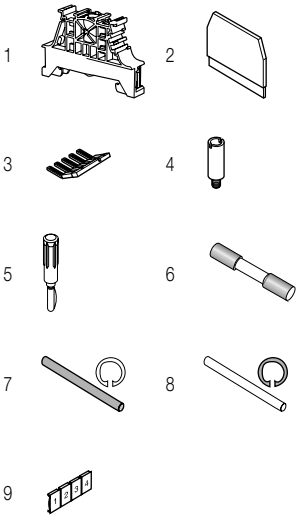


| | Description | | | Color | Type | Part Number | | Pkg qty | Weight (1 pce) g |
|---|---|---|---|---|---|---|---|---|---|
| 1 | End stops | 10 mm | 0.394 in | Grey | BAM4 | 1SNK900001R0000 | | 50 | 12.00 |
| | | 9 mm | 0.354 in | | BAZ1 | 1SNK900002R0000 | | 50 | 4.70 |
| 2 | End sections | 1.5 mm | 0.059 in | Black | FEM13U | 1SNA199635R2400 | | 10 | 5.80 |
| 3 | Lateral jumper bars | 10 poles | 70 A | | PC13-10 | 1SNA173510R2000 | | 10 | 26.00 |
| 4 | Test sockets | DIA 2 mm | 0.079 in | | AL2 | 1SNA163043R2100 | | 50 | 0.90 |
| | | DIA 3 mm | 0.120 in | | AL3 | 1SNA163261R0000 | | 50 | 1.20 |
| | | DIA 4 mm | 0.157 in | | AL4-M3 | 1SNA206721R0100 | | 50 | 1.10 |
| 5 | Test plugs | DIA 2 mm | 0.079 in | Black | FC2 | 1SNA007865R2600 | | 100 | |
| | | DIA 4 mm | 0.157 in | White | FC4 | 1SNA167860R0100 | | 10 | 10.00 |
| 6 | Fuses | 1 A | | | FU633 | 1SNA168556R0500 | | 10 | |
| | | 2.5 A | | | | 1SNA168558R1700 | | 10 | |
| | | 6.3 A | | | | 1SNA168560R1500 | | 10 | |
| 7 | Assembly rods | 2 poles | | | TGA13 | 1SNA168564R0500 | | 10 | |
| | | 3 poles | | | | 1SNA168565R0600 | | 10 | |
| | | 4 poles | | | | 1SNA168566R0700 | | 10 | |
| 8 | Spring retaining rings | | | | ANT | 1SNA168675R1400 | | 10 | |
| 9 | Terminal block markers | Blank card | | White | RC1010 | 1SNA238000R1600 | | 1 | 1.30 |

Complete list of accessories is indicated in the terminal block datasheet.
Some accessories such as jumper bars may modify the terminal block's ratings: complete information in the accessories catalogue pages.

## Disconnect screw clamp terminal blocks

| Description | | Color | Type | Part Number | | Pkg qty | Weight (1 pce) g |
|---|---|---|---|---|---|---|---|
| Disconnect | Profile aligned with ML10/13 SF | Black, blue | ML10/13.SN | 1SNA199105R2200 | | 20 | 59.00 |

Technical data valid for copper conductors only.

**10 mm²**
10 AWG

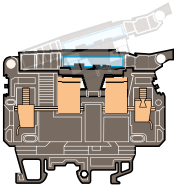

**13 mm** 0.512 in spacing

## With blown fuse indicator by neon

### Ordering details

| Description | | Color | Type | Part Number | | Pkg qty | Weight (1 pce) g |
|---|---|---|---|---|---|---|---|
| Fuse | With blown fuse indicator by neon 110-230 V AC | Black ■ | ML10/13.SFL | 1SNA199168R0000 | | 20 | 54.00 |

| Main technical data | IEC | UL | CSA |
|---|---|---|---|
| Rated voltage | 800 V | 600 V | 600 V |
| Impulse withstand voltage | 8000 V | | |
| Protection | | NEMA | |

Leakage current :
110 V : < 0.5 mA
230 V : < 0.7 mA

CE RoHS USR CSA Gost R

**10 mm²**
10 AWG

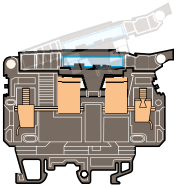

**13 mm** 0.512 in spacing

## With blown fuse indicator by LED

### Ordering details

| Description | | Color | Type | Part Number | | Pkg qty | Weight (1 pce) g |
|---|---|---|---|---|---|---|---|
| Fuse | With blown fuse indicator by LED 24 V AC/DC | Black ■ | ML10/13.SFD | 1SNA199166R2600 | | 20 | 54.00 |

| Main technical data | IEC | UL | CSA |
|---|---|---|---|
| Rated voltage | 800 V | 600 V | 600 V |
| Impulse withstand voltage | 8000 V | | |
| Protection | | NEMA | |

Leakage current :
24 V : < 4.5 mA

CE RoHS USR CSA Gost R

Technical data valid for copper conductors only.



1SNC161107S0201 - Rev. A

# ML10/13.SN screw clamp terminal blocks

## Disconnect with lever - 13 mm 0.512 in spacing

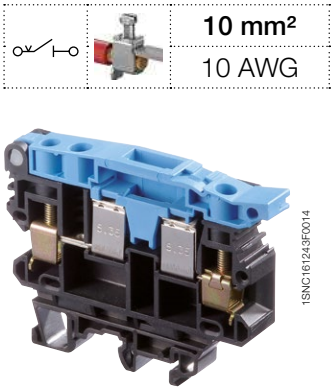

| | |
|---|---|
| 10 mm² | |
| 10 AWG | |




ML10/13.SN

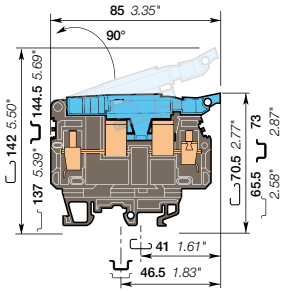


**13 mm** 0.512 in spacing

## Description

- Simplify the disconnect operations for the disconnect terminal blocks installed next to fuse terminal blocks ML10/13.SF...,
- With the same profile as ML10/13.SF, the ML10/13.SN disconnect lever is easily operated by hand and the wiring of the alternated disconnect and fuse circuits is easier,
- Link bar for lever included in terminal block.

## Ordering details

| Description | | Color | Type | Part Number | | Pkg qty | Weight (1 pce) g |
|---|---|---|---|---|---|---|---|
| Disconnect | With test sockets DIA 2 mm 0.079 in | Black, blue | ML10/13.SN | 1SNA199105R2200 | | 20 | 59.00 |

## Main technical data

| Connecting capacity | | IEC | UL | CSA |
|---|---|---|---|---|
| 1 conductor per clamp | Rigid - Solid / Stranded | 0.5-16 mm² | 22-10 AWG | 22-8 AWG |
| | Flexible | 0.5-10 mm² | | |
| | with insulated ferrule | | | |
| | Gauge | A6 | | |
| Rated current / Rated cross section | | 16 A / 10 mm² | 25 A / 10 AWG | 25 A / 8 AWG |
| Rated short-time withstand current (1s) | | 180 A | | |
| Rated voltage | | 800 V | 600 V | 600 V |
| Impulse withstand voltage | | 8000 V | | |
| Protection | | | NEMA | |

The connecting capacity data for one Rigid - Solid / Stranded - Flexible conductor (when applicable) is a mandatory information required by IEC, UL and CSA standards.
All other data are provided as supplementary information only. For more details, please consult our CB, UL or CSA certificates and technical datasheet available on http://www.te.com

CE RoHS USR CSA Gost R

## Mounting instructions

| | |
|---|---|
| Rail | G32, TH 35-7.5, TH 35-15 |
| Wire stripping length | 12 mm 0.472 in |
| Tool | Flat screwdriver Ø 5.5 mm Ø 0.217 in |
| Torque | 1.2 - 1.4 N.m 10.6 - 12.3 lb.in |

## Notes

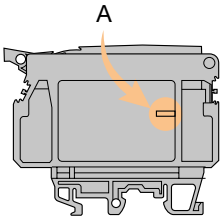


A: Use of the BJS requires the user to cut out the partition.

## Accessories

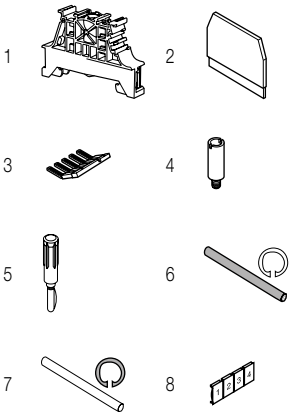


| | Description | | | Color | Type | Part Number | | Pkg qty | Weight (1 pce) g |
|---|---|---|---|---|---|---|---|---|---|
| 1 | End stops | 10 mm | 0.394 in | Grey | BAM4 | 1SNK900001R0000 | | 50 | 12.00 |
| | | 9 mm | 0.354 in | | BAZ1 | 1SNK900002R0000 | | 50 | 4.70 |
| 2 | End sections | 1.5 mm | 0.059 in | Black | FEM13U | 1SNA199635R2400 | | 10 | 5.80 |
| 3 | Lateral jumper bars | 10 poles | 70 A | | PC13-10 | 1SNA173510R2000 | | 10 | 26.00 |
| 4 | Test sockets | DIA 2 mm 0.079 in | | | AL2 | 1SNA163043R2100 | | 50 | 0.90 |
| | | DIA 3 mm 0.120 in | | | AL3 | 1SNA163261R0000 | | 50 | 1.20 |
| | | DIA 4 mm 0.157 in | | | AL4-M3 | 1SNA206721R0100 | | 50 | 1.10 |
| 5 | Test plugs | DIA 2 mm 0.079 in | | Black | FC2 | 1SNA007865R2600 | | 100 | |
| | | DIA 4 mm 0.157 in | | White | FC4 | 1SNA167860R0100 | | 10 | |
| 6 | Assembly rods | 2 poles | | | TGA13 | 1SNA168564R0500 | | 10 | |
| | | 3 poles | | | | 1SNA168565R0600 | | 10 | |
| | | 4 poles | | | | 1SNA168566R0700 | | 10 | |
| 7 | Spring retaining rings | | | | ANT | 1SNA168675R1400 | | 10 | |
| 8 | Terminal block markers | Blank card | | White | RC1010 | 1SNA238000R1600 | | 1 | 1.30 |

Complete list of accessories is indicated in the terminal block datasheet.
Some accessories such as jumper bars may modify the terminal block's ratings: complete information in the accessories catalogue pages.

Technical data valid for copper conductors only.

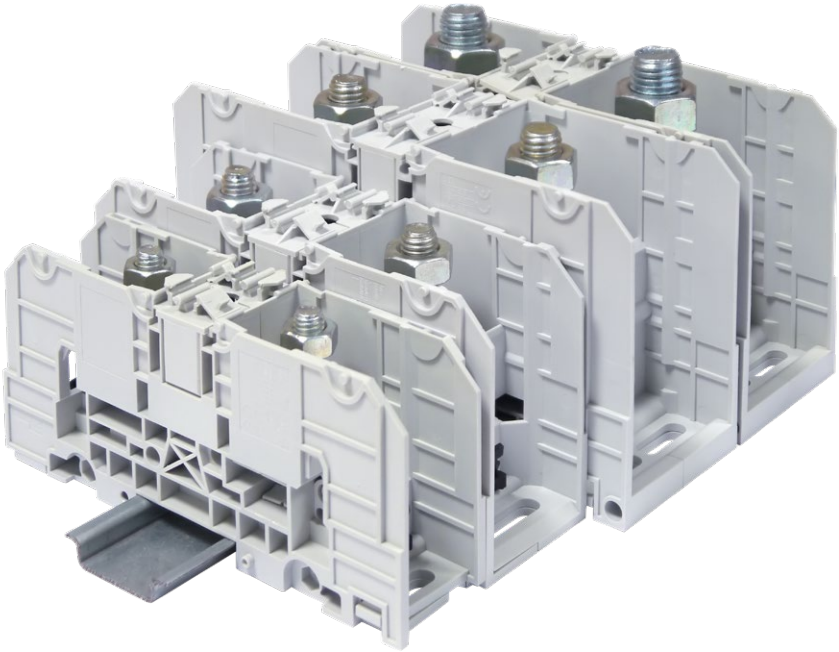

1SNC165013S0201

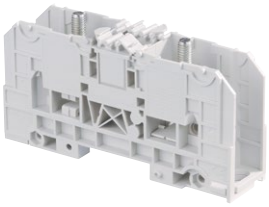

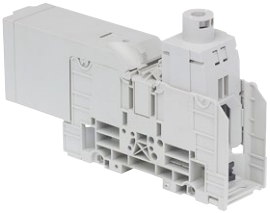


| | | |
|---|---|---|
| Overview | | 90 |
| **Feed-through stud** | | |
| 35 mm² / 1 AWG | **D35/27.FF** | 91 |
| 70 mm² / 000 AWG | **D70/32.FF** | 92 |
| 120 mm² / 300 Kcmil | **D120/42.FF** | 93 |
| 185 mm² / 500 Kcmil | **D185/55.FF** | 94 |
| 300 mm² / 1000 Kcmil | **D300/55.FF** | 95 |
| **Feed-through stud and screw clamp** | | |
| 35 mm² / 1 AWG | **D35/27.AF** | 96 |
| 70 mm² / 000 AWG | **D70/32.AF** | 97 |
| 120 mm² / 300 AWG | **D120/42.AF** | 98 |
| 185 mm² / 500 AWG | **D185/55.AF** | 99 |
| Mounting instructions | | 100 |




1SNC165013S0201

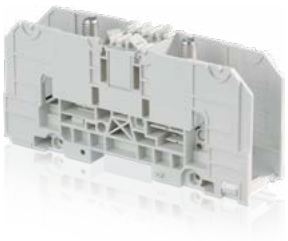

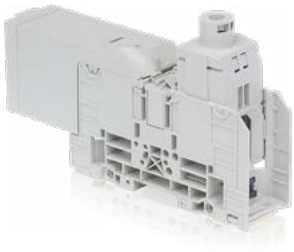

## Feed-through

**Section**

| IEC | UL/CSA | | | | |
|---|---|---|---|---|---|
| 35 mm² | 1 AWG | D35/27.FF | 27 mm 1.063 in | D35/27.AF | 27 mm 1.063 in |
| 70 mm² | 000 AWG | D70/32.FF | 32 mm 1.260 in | D70/32.AF | 32 mm 1.260 in |
| 120 mm² | 300 Kcmil | D120/42.FF | 42 mm 1.654 in | D120/42.AF | 42 mm 1.654 in |
| 185 mm² | 500 Kcmil | D185/55.FF | 55 mm 2.165 in | D185/55.AF | 55 mm 2.165 in |
| 300 mm² | 1000 Kcmil | D300/55.FF | 55 mm 2.165 in | | |



Terminal - Hole for testing or jumpering

1SNC165012S0201

# D35/27.FF power terminal blocks

## Feed-through - 27 mm 1.062 in spacing

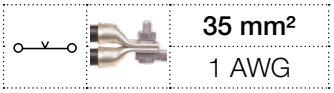

**35 mm²**

1 AWG

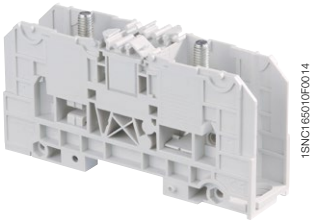


D35/27.FF

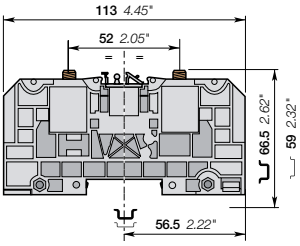


**27 mm** 1.062 in spacing

### Description

- Rated cross section up to 300 mm² / 1000 Kcmil, IP20 protection cover,
- Holding foot on DIN 3 rail with two position for easy mounting, lug mounting in accordance with NF C 20-130 and DIN 46234, various marking options, rail or base mounting.

### Ordering details

| Description | | Color | Type | Part Number | | Pkg qty | Weight (1 pce) g |
|---|---|---|---|---|---|---|---|
| **Feed-through** | 2 studs M6 without cover | Grey | D35/27.FF | 1SNA190001R2000 | | 10 | 130.00 |

### Main technical data

| Connecting capacity | | NF C | DIN | UL | CSA |
|---|---|---|---|---|---|
| **Lugs** | Rigid - Solid / Stranded | 2.5-35 mm² | 2.5-50 mm² | 1 AWG | |
| | Flexible | 2.5-35 mm² | 2.5-35 mm² | | |
| | Gauge | C4 | | | |

| | | IEC | UL | CSA |
|---|---|---|---|---|
| **Screw clamp** | Rigid - Solid / Stranded | | | |
| | Flexible | | | |
| | Gauge | | | |

| | IEC | UL | CSA |
|---|---|---|---|
| **Bar** | | | |
| **Rated current** | 125 A | 125 A | |
| **Rated cross section** | 35 mm² | 1 AWG | |
| **Rated voltage** | 1000 V | 600 V | |
| **Impulse withstand voltage** | 8000 V | | |

### Mounting instructions

| | | |
|---|---|---|
| Rail | | TH 35-7.5, TH 35-15 |
| Lugs Tool | | Wrench H10 mm |
| Torque | | 3 - 6 N.m 26.1 - 52 lb.in |
| Jumper screw Tool | | Allen key 6 mm 0.236 in |
| Torque | | 6 - 12 N.m 52 - 104 lb.in |
| Screw clamp Tool | | |
| Torque | | |
| Wire stripping length | | |

The connecting capacity data for one Rigid - Solid / Stranded - Flexible conductor (when applicable) is a mandatory information required by IEC, UL and CSA standards.
All other data are provided as supplementary information only. For more details, please consult our CB, UL or CSA certificates and technical datasheet available on http://www.te.com

RoHS RoHS · USR CNR · Gost R

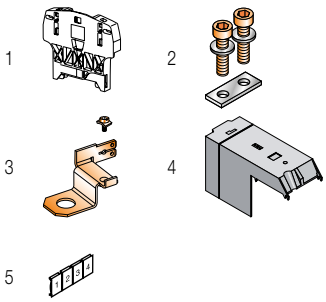


### Accessories

| | Description | | | Color | Type | Part Number | | Pkg qty | Weight (1 pce) g |
|---|---|---|---|---|---|---|---|---|---|
| 1 | **End stops** | 12 mm | 0.472 in | Grey | BAZH1 | 1SNK900102R0000 | | 50 | 24.00 |
| 2 | **Jumper bars** | 2 poles | | | BJS27-2 | 1SNA205772R1300 | | 5 | 34.00 |
| | | 3 poles | | | BJS27-3 | 1SNA205773R1400 | | 5 | 52.00 |
| 3 | **Splitters** | For 6.35x0.8mm faston clips and screws | | | DRF6 | 1SNA205767R1600 | | 10 | 4.00 |
| 4 | **Protecting covers** | IP20 rotating protecting cover | | Grey | CPUF35 | 1SNA190016R1600 | | 2 | 8.30 |
| 5 | **Terminal block markers** | Blank card | | White | RC810 | 1SNA234000R0200 | | 1 | 8.20 |

Complete list of accessories is indicated in the terminal block datasheet.
Some accessories such as jumper bars may modify the terminal block's ratings: complete information in the accessories catalogue pages.

Technical data valid for copper conductors only.



1SNC165006S0201 - Rev. C

# D70/32.FF power terminal blocks

## Feed-through - 32 mm 1.260 in spacing

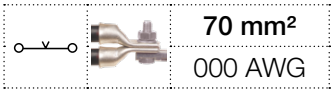

| 70 mm² |
|---|
| 000 AWG |

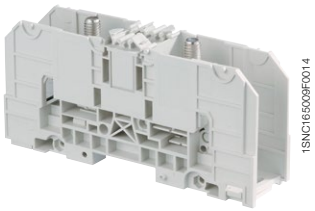


D70/32.FF

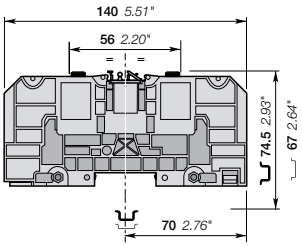


**32 mm** 1.260 in spacing

### Description

- Rated cross section up to 300 mm2 / 1000 Kcmil, IP20 protection cover,
- Holding foot on DIN 3 rail with two position for easy mounting, lug mounting in accordance with NF C 20-130 and DIN 46234, various marking options, rail or base mounting.

### Ordering details

| Description | | Color | Type | Part Number | | Pkg qty | Weight (1 pce) g |
|---|---|---|---|---|---|---|---|
| **Feed-through** | 2 studs M8 without cover | Grey | D70/32.FF | 1SNA190002R2100 | | 3 | 269.00 |

### Main technical data

| Connecting capacity | | NF C | DIN | UL | CSA |
|---|---|---|---|---|---|
| **Lugs** | Rigid - Solid / Stranded | 6-95 mm² | 6-70 mm² | 000 AWG | |
| | Flexible | 6-70 mm² | 6-70 mm² | | |
| | Gauge | C6 | | | |

| | | IEC | UL | CSA |
|---|---|---|---|---|
| **Screw clamp** | Rigid - Solid / Stranded | | | |
| | Flexible | | | |
| | Gauge | | | |

| | IEC | UL | CSA |
|---|---|---|---|
| **Bar** | | | |
| **Rated current** | 192 A | 170 A | |
| **Rated cross section** | 70 mm² | 000 AWG | |
| **Rated voltage** | 1000 V | 600 V | |
| **Impulse withstand voltage** | 8000 V | | |

### Mounting instructions

| | | |
|---|---|---|
| Rail | | TH 35-7.5, TH 35-15 |
| Lugs Tool | | Wrench H13 mm |
| Torque | | 6 - 12 N.m 52 - 104 lb.in |
| Jumper screw Tool | | Allen key 6 mm 0.236 in |
| Torque | | 6 - 12 N.m 52 - 104 lb.in |
| Screw clamp Tool | | |
| Torque | | |
| Wire stripping length | | |

The connecting capacity data for one Rigid - Solid / Stranded - Flexible conductor (when applicable) is a mandatory information required by IEC, UL and CSA standards.
All other data are provided as supplementary information only. For more details, please consult our CB, UL or CSA certificates and technical datasheet available on http://www.te.com

RoHS RoHS | USR CNR | Gost R

### Accessories

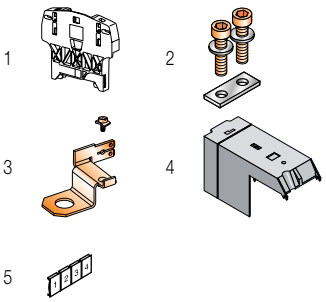


| | Description | | | Color | Type | Part Number | | Pkg qty | Weight (1 pce) g |
|---|---|---|---|---|---|---|---|---|---|
| 1 | **End stops** | 12 mm | 0.472 in | Grey | BAZH1 | 1SNK900102R0000 | | 50 | 24.00 |
| 2 | **Jumper bars** | 2 poles | | | BJS32-2 | 1SNA205774R1500 | | 5 | 66.00 |
| | | 3 poles | | | BJS32-3 | 1SNA205775R1600 | | 5 | 105.80 |
| 3 | **Splitters** | For 6.35x0.8mm faston clips and screws | | | DRF8 | 1SNA205768R2700 | | 10 | 5.00 |
| 4 | **Protecting covers** | IP20 rotating protecting cover | | Grey | CPUF70 | 1SNA190017R1700 | | 2 | 12.00 |
| 5 | **Terminal block markers** | Blank card | | White | RC810 | 1SNA234000R0200 | | 1 | 8.20 |

Complete list of accessories is indicated in the terminal block datasheet.
Some accessories such as jumper bars may modify the terminal block's ratings: complete information in the accessories catalogue pages.

Technical data valid for copper conductors only.

1SNC165005S0201 - Rev. C

# D120/42.FF power terminal blocks
## Feed-through - 42 mm 1.653 in spacing

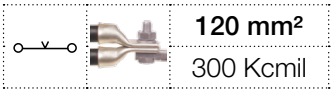

**120 mm²**
300 Kcmil

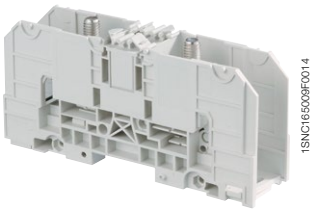


D120/42.FF

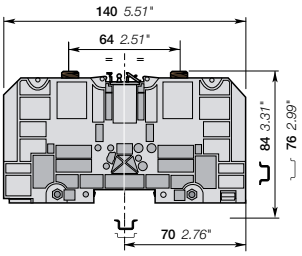


**42 mm** 1.653 in spacing

### Description

- Rated cross section up to 300 mm² / 1000 Kcmil, IP20 protection cover,
- Holding foot on DIN 3 rail with two position for easy mounting, lug mounting in accordance with NF C 20-130 and DIN 46234, various marking options, rail or base mounting.

### Ordering details

| Description | | Color | Type | Part Number | | Pkg qty | Weight (1 pce) g |
|---|---|---|---|---|---|---|---|
| **Feed-through** | 2 studs M10 without cover | Grey | D120/42.FF | 1SNA190003R2200 | | 1 | 423.00 |

### Main technical data

| Connecting capacity | | NF C | DIN | UL | CSA |
|---|---|---|---|---|---|
| **Lugs** | Rigid - Solid / Stranded | 6-150 mm² | 6-120 mm² | 300 Kcmil | |
| | Flexible | 6-120 mm² | | | |
| | Gauge | C8 | | | |

| | | IEC | UL | CSA |
|---|---|---|---|---|
| **Screw clamp** | Rigid - Solid / Stranded | | | |
| | Flexible | | | |
| | Gauge | | | |

| | IEC | UL | CSA |
|---|---|---|---|
| **Bar** | | | |
| **Rated current** | 269 A | 269 A | |
| **Rated cross section** | 120 mm² | 300 Kcmil | |
| **Rated voltage** | 1000 V | 600 V | |
| **Impulse withstand voltage** | 8000 V | | |

### Mounting instructions

| | | |
|---|---|---|
| Rail | | TH 35-7.5, TH 35-15 |
| Lugs Tool | | Wrench H17 mm |
| Torque | | 10 - 20 N.m 87 - 174 lb.in |
| Jumper screw Tool | | Allen key 6 mm 0.236 in |
| Torque | | 6 - 12 N.m 52 - 104 lb.in |
| Screw clamp Tool | | |
| Torque | | |
| Wire stripping length | | |

The connecting capacity data for one Rigid - Solid / Stranded - Flexible conductor (when applicable) is a mandatory information required by IEC, UL and CSA standards.
All other data are provided as supplementary information only. For more details, please consult our CB, UL or CSA certificates and technical datasheet available on http://www.te.com

RoHS RoHS · USR CNR · Gost R

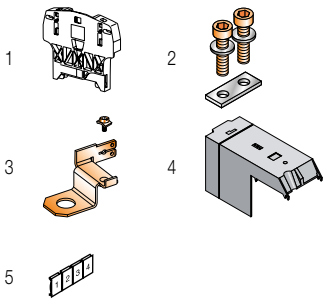


### Accessories

| | Description | | | Color | Type | Part Number | | Pkg qty | Weight (1 pce) g |
|---|---|---|---|---|---|---|---|---|---|
| 1 | **End stops** | 12 mm | 0.472 in | Grey | BAZH1 | 1SNK900102R0000 | | 50 | 24.00 |
| 2 | **Jumper bars** | 2 poles | | | BJS42-2 | 1SNA205776R1700 | | 5 | 93.00 |
| | | 3 poles | | | BJS42-3 | 1SNA205777R1000 | | 5 | 153.00 |
| 3 | **Splitters** | For 6.35x0.8mm faston clips and screws | | | DRF10 | 1SNA205769R2000 | | 10 | 7.00 |
| 4 | **Protecting covers** | IP20 rotating protecting cover | | Grey | CPUF120 | 1SNA190018R2000 | | 2 | 24.00 |
| 5 | **Terminal block markers** | Blank card | | White | RC810 | 1SNA234000R0200 | | 1 | 8.20 |

Complete list of accessories is indicated in the terminal block datasheet.
Some accessories such as jumper bars may modify the terminal block's ratings: complete information in the accessories catalogue pages.

Technical data valid for copper conductors only.

# D185/55.FF power terminal blocks
## Feed-through - 55 mm 2.165 in spacing

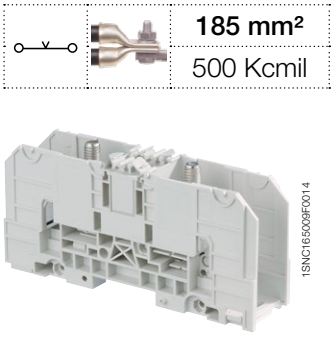

**185 mm²**
500 Kcmil




D185/55.FF

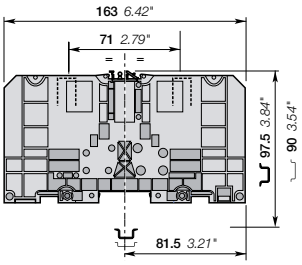


**55 mm** 2.165 in spacing

### Description

- Rated cross section up to 300 mm² / 1000 Kcmil, IP20 protection cover,
- Holding foot on DIN 3 rail with two position for easy mounting, lug mounting in accordance with NF C 20-130 and DIN 46234, various marking options, rail or base mounting.

### Ordering details

| Description | | Color | Type | Part Number | | Pkg qty | Weight (1 pce) g |
|---|---|---|---|---|---|---|---|
| **Feed-through** | 2 studs M12 without cover | Grey | D185/55.FF | 1SNA190004R2300 | | 1 | 615.00 |

### Main technical data

| Connecting capacity | | NF C | DIN | UL | CSA |
|---|---|---|---|---|---|
| **Lugs** | Rigid - Solid / Stranded | 25-240 mm² | 6-185 mm² | 500 Kcmil | |
| | Flexible | 6-185 mm² | | | |
| | Gauge | C11 | | | |

| | | IEC | UL | CSA |
|---|---|---|---|---|
| **Screw clamp** | Rigid - Solid / Stranded | | | |
| | Flexible | | | |
| | Gauge | | | |

| | IEC | UL | CSA |
|---|---|---|---|
| **Bar** | | | |
| **Rated current** | 353 A | 353 A | |
| **Rated cross section** | 185 mm² | 500 Kcmil | |
| **Rated voltage** | 1000 V | 600 V | |
| **Impulse withstand voltage** | 8000 V | | |

### Mounting instructions

| | |
|---|---|
| Rail | TH 35-7.5, TH 35-15 |
| Lugs Tool | Wrench H24 mm |
| Torque | 14 - 30 N.m 123.9 - 265.5 lb.in |
| Jumper screw Tool | Allen key 6 mm 0.236 in |
| Torque | 6 - 12 N.m 52 - 104 lb.in |
| Screw clamp Tool | |
| Torque | |
| Wire stripping length | |

The connecting capacity data for one Rigid - Solid / Stranded - Flexible conductor (when applicable) is a mandatory information required by IEC, UL and CSA standards.
All other data are provided as supplementary information only. For more details, please consult our CB, UL or CSA certificates and technical datasheet available on http://www.te.com

RoHS — RoHS; USR CNR; Gost R

### Accessories

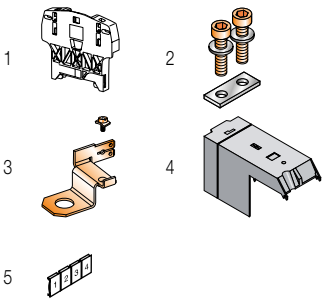


| | Description | | | Color | Type | Part Number | | Pkg qty | Weight (1 pce) g |
|---|---|---|---|---|---|---|---|---|---|
| 1 | **End stops** | 12 mm | 0.472 in | Grey | BAZH1 | 1SNK900102R0000 | | 50 | 24.00 |
| 2 | **Jumper bars** | 2 poles | | | BJS551-2 | 1SNA205778R2100 | | 5 | 158.00 |
| | | 3 poles | | | BJS551-3 | 1SNA205779R2200 | | 5 | 266.00 |
| 3 | **Splitters** | For 6.35x0.8mm faston clips and screws | | | DRF12 | 1SNA205770R2500 | | 10 | 8.00 |
| 4 | **Protecting covers** | IP20 rotating protecting cover | | Grey | CPUF185 | 1SNA190019R2100 | | 2 | 40.00 |
| 5 | **Terminal block markers** | Blank card | | White | RC810 | 1SNA234000R0200 | | 1 | 8.20 |

Complete list of accessories is indicated in the terminal block datasheet.
Some accessories such as jumper bars may modify the terminal block's ratings: complete information in the accessories catalogue pages.

Technical data valid for copper conductors only.

1SNC165010S0201 - Rev. C

# D300/55.FF power terminal blocks
## Feed-through - 55 mm 2.165 in spacing

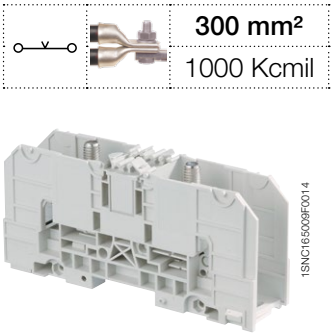

| | |
|---|---|
| 300 mm² | |
| 1000 Kcmil | |




D300/55.FF

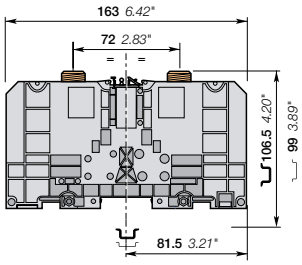


**55 mm** 2.165 in spacing

### Description

- Rated cross section up to 300 mm² / 1000 Kcmil, IP20 protection cover,
- Holding foot on DIN 3 rail with two position for easy mounting, lug mounting in accordance with NF C 20-130 and DIN 46234, various marking options, rail or base mounting.

### Ordering details

| Description | | Color | Type | Part Number | | Pkg qty | Weight (1 pce) g |
|---|---|---|---|---|---|---|---|
| **Feed-through** | 2 studs M16 without cover | Grey | D300/55.FF | 1SNA190005R2400 | | 1 | 775.00 |

### Main technical data

| Connecting capacity | | NF C | DIN | UL | CSA |
|---|---|---|---|---|---|
| **Lugs** | Rigid - Solid / Stranded | 25-300 mm² | 6-300 mm² | 1000 Kcmil | |
| | Flexible | 6-300 mm² | | | |
| | Gauge | | | | |

| | | IEC | UL | CSA |
|---|---|---|---|---|
| **Screw clamp** | Rigid - Solid / Stranded | | | |
| | Flexible | | | |
| | Gauge | | | |

| | IEC | UL | CSA |
|---|---|---|---|
| **Bar** | | | |
| **Rated current** | 520 A | 460 A | |
| **Rated cross section** | 300 mm² | 1000 Kcmil | |
| **Rated voltage** | 1000 V | 600 V | |
| **Impulse withstand voltage** | 8000 V | | |

### Mounting instructions

| | | |
|---|---|---|
| Rail | | TH 35-7.5, TH 35-15 |
| Lugs Tool | | Wrench H24 mm |
| Torque | | 25 - 50 N.m<br>217 - 435 lb.in |
| Jumper screw Tool | | Allen key 6 mm<br>0.236 in |
| Torque | | 6 - 12 N.m<br>52 - 104 lb.in |
| Screw clamp Tool | | |
| Torque | | |
| Wire stripping length | | |

The connecting capacity data for one Rigid - Solid / Stranded - Flexible conductor (when applicable) is a mandatory information required by IEC, UL and CSA standards.
All other data are provided as supplementary information only. For more details, please consult our CB, UL or CSA certificates and technical datasheet available on http://www.te.com

RoHS — USR CNR — Gost R

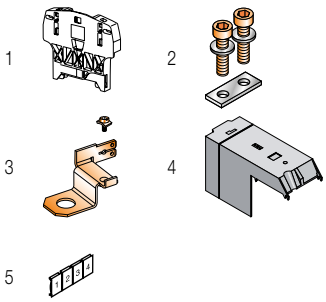


### Accessories

| | Description | | | Color | Type | Part Number | | Pkg qty | Weight (1 pce) g |
|---|---|---|---|---|---|---|---|---|---|
| 1 | **End stops** | 12 mm | 0.472 in | Grey | BAZH1 | 1SNK900102R0000 | | 50 | 24.00 |
| 2 | **Jumper bars** | 2 poles | | | BJS551-2 | 1SNA205778R2100 | | 5 | 158.00 |
| | | 3 poles | | | BJS551-3 | 1SNA205779R2200 | | 5 | 266.00 |
| 3 | **Splitters** | For 6.35x0.8mm faston clips and screws | | | DRF16 | 1SNA205771R1200 | | 10 | 7.00 |
| 4 | **Protecting covers** | IP20 rotating protecting cover | | Grey | CPUF185 | 1SNA190019R2100 | | 2 | 40.00 |
| 5 | **Terminal block markers** | Blank card | | White | RC810 | 1SNA234000R0200 | | 1 | 8.20 |

Complete list of accessories is indicated in the terminal block datasheet.
Some accessories such as jumper bars may modify the terminal block's ratings: complete information in the accessories catalogue pages.

Technical data valid for copper conductors only.



1SNC165011S0201 - Rev. C

# D35/27.AF power terminal blocks

## Feed-through - 27 mm 1.062 in spacing

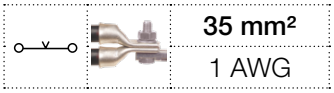

35 mm²

1 AWG

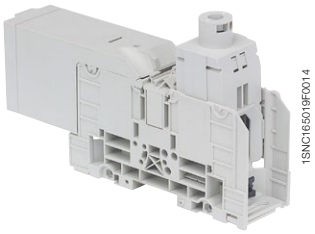


D35/27.AF

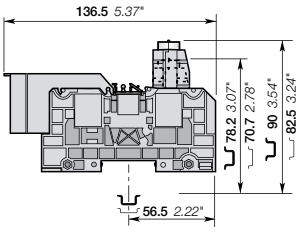


**27 mm** 1.062 in spacing

### Description

- Rated cross section up to 240 mm² / 500 Kcmil, IP20 protection cover,
- Holding foot on DIN 3 rail with two position for easy mounting, lug mounting in accordance with NF C 20-130 and DIN 46234, various marking options, rail or base mounting.

### Ordering details

| Description | | Color | Type | Part Number | | Pkg qty | Weight (1 pce) g |
|---|---|---|---|---|---|---|---|
| **Feed-through** | 1 stud M6 + 1 wire-clamp with covers | Grey | D35/27.AF | 1SNA190006R2500 | | 10 | 149.00 |

### Main technical data

| Connecting capacity | | NFC | DIN | UL | CSA |
|---|---|---|---|---|---|
| **Lugs** | Rigid - Solid / Stranded | 2.5-35 mm² | 2.5-50 mm² | 1 AWG | |
| | Flexible | 2.5-35 mm² | 2.5-35 mm² | | |
| | Gauge | C4 | | | |

| | | IEC | UL | CSA |
|---|---|---|---|---|
| **Screw clamp** | Rigid - Solid / Stranded | 2.5-35 mm² | 1-12 AWG | |
| | Flexible | 2.5-35 mm² | | |
| | Gauge | | | |

| | IEC | UL | CSA |
|---|---|---|---|
| **Bar** | | | |
| **Rated current** | 125 A | 130 A | |
| **Rated cross section** | 35 mm² | 1 AWG | |
| **Rated voltage** | 1000 V | 600 V | |
| **Impulse withstand voltage** | 8000 V | | |

### Mounting instructions

| | |
|---|---|
| Rail | TH 35-7.5, TH 35-15 |
| Lugs Tool | Wrench H10 mm |
| Torque | 3 - 6 N.m 26.1 - 52 lb.in |
| Jumper screw Tool | Allen key 6 mm 0.236 in |
| Torque | 6 - 12 N.m 52 - 104 lb.in |
| Screw clamp Tool | Allen key 5 mm 0.197 in |
| Torque | 3.5 ± 0.5 N.m 30.9 ± 4.43 lb.in |
| Wire stripping length | 28 mm 1.102 in |

The connecting capacity data for one Rigid - Solid / Stranded - Flexible conductor (when applicable) is a mandatory information required by IEC, UL and CSA standards.
All other data are provided as supplementary information only. For more details, please consult our CB, UL or CSA certificates and technical datasheet available on http://www.te.com

RoHS RoHS | USR CNR | Gost R

### Accessories

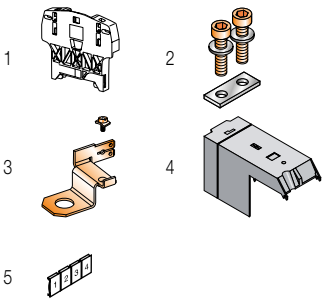


| | Description | | | Color | Type | Part Number | | Pkg qty | Weight (1 pce) g |
|---|---|---|---|---|---|---|---|---|---|
| 1 | **End stops** | 12 mm | 0.472 in | Grey | BAZH1 | 1SNK900102R0000 | | 50 | 24.00 |
| 2 | **Jumper bars** | 2 poles | | | BJS27-2 | 1SNA205772R1300 | | 5 | 34.00 |
| | | 3 poles | | | BJS27-3 | 1SNA205773R1400 | | 5 | 52.00 |
| 3 | **Splitters** | For 6.35x0.8mm faston clips and screws | | | DRF6 | 1SNA205767R1600 | | 10 | 4.00 |
| 4 | **Protecting covers** | IP20 rotating protecting cover | | Grey | CPUF35 | 1SNA190016R1600 | | 2 | 8.30 |
| 5 | **Terminal block markers** | Blank card | | White | RC810 | 1SNA234000R0200 | | 1 | 8.20 |

Complete list of accessories is indicated in the terminal block datasheet.
Some accessories such as jumper bars may modify the terminal block's ratings: complete information in the accessories catalogue pages.

Technical data valid for copper conductors only.

1SNC165003S0201 - Rev. C

# D70/32.AF power terminal blocks
## Feed-through - 32 mm 1.260 in spacing

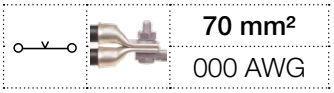

**70 mm²**
000 AWG

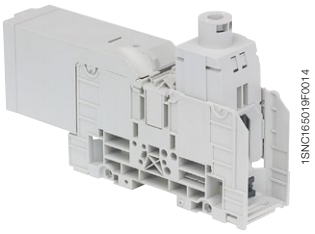


**D70/32.AF**

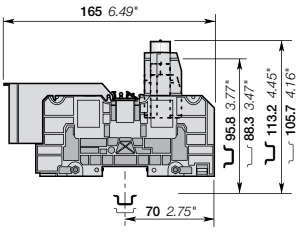


**32 mm** 1.260 in spacing

### Description

- Rated cross section up to 240 mm² / 500 Kcmil, IP20 protection cover,
- Holding foot on DIN 3 rail with two position for easy mounting, lug mounting in accordance with NF C 20-130 and DIN 46234, various marking options, rail or base mounting.

### Ordering details

| Description | | Color | Type | Part Number | | Pkg qty | Weight (1 pce) g |
|---|---|---|---|---|---|---|---|
| **Feed-through** | 1 stud M8 + 1 wire-clamp with covers | Grey | D70/32.AF | 1SNA190007R2600 | | 3 | 269.00 |

### Main technical data

| Connecting capacity | | NFC | DIN | UL | CSA |
|---|---|---|---|---|---|
| **Lugs** | Rigid - Solid / Stranded | 6-95 mm² | 6-70 mm² | 000 AWG | |
| | Flexible | 6-70 mm² | 6-70 mm² | | |
| | Gauge | | | | |

| | | IEC | UL | CSA |
|---|---|---|---|---|
| **Screw clamp** | Rigid - Solid / Stranded | 6-95 mm² | 10-000 AWG | |
| | Flexible | 6-70 mm² | | |
| | Gauge | | | |

| | IEC | UL | CSA |
|---|---|---|---|
| **Bar** | | | |
| **Rated current** | 192 A | 165 A | |
| **Rated cross section** | 70 mm² | 000 AWG | |
| **Rated voltage** | 1000 V | 600 V | |
| **Impulse withstand voltage** | 8000 V | | |

### Mounting instructions

| | | |
|---|---|---|
| Rail | | TH 35-7.5, TH 35-15 |
| Lugs Tool | | Wrench H13 mm |
| Torque | | 6 - 12 N.m<br>52 - 104 lb.in |
| Jumper screw Tool | | Allen key 6 mm<br>0.236 in |
| Torque | | 6 - 12 N.m<br>52 - 104 lb.in |
| Screw clamp Tool | | Wrench 6 mm<br>0.236 in |
| Torque | | 7 ±1 N.m<br>61.9 ± 8.85 lb.in |
| Wire stripping length | | 33 mm<br>1.299 in |

The connecting capacity data for one Rigid - Solid / Stranded - Flexible conductor (when applicable) is a mandatory information required by IEC, UL and CSA standards.
All other data are provided as supplementary information only. For more details, please consult our CB, UL or CSA certificates and technical datasheet available on http://www.te.com

RoHS RoHS | USR CNR | Gost R

### Accessories

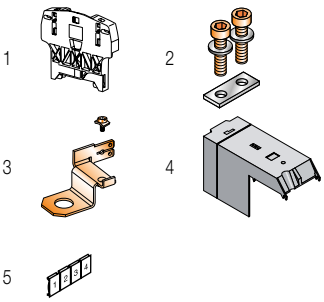


| | Description | | | Color | Type | Part Number | | Pkg qty | Weight (1 pce) g |
|---|---|---|---|---|---|---|---|---|---|
| 1 | **End stops** | 12 mm | 0.472 in | Grey | BAZH1 | 1SNK900102R0000 | | 50 | 24.00 |
| 2 | **Jumper bars** | 2 poles | | | BJS32-2 | 1SNA205774R1500 | | 5 | 66.00 |
| | | 3 poles | | | BJS32-3 | 1SNA205775R1600 | | 5 | 105.80 |
| 3 | **Splitters** | For 6.35x0.8mm faston clips and screws | | | DRF8 | 1SNA205768R2700 | | 10 | 5.00 |
| 4 | **Protecting covers** | IP20 rotating protecting cover | | Grey | CPUF70 | 1SNA190017R1700 | | 2 | 12.00 |
| 5 | **Terminal block markers** | Blank card | | White | RC810 | 1SNA234000R0200 | | 1 | 8.20 |

Complete list of accessories is indicated in the terminal block datasheet.
Some accessories such as jumper bars may modify the terminal block's ratings: complete information in the accessories catalogue pages.

Technical data valid for copper conductors only.

# D120/42.AF power terminal blocks
## Feed-through - 42 mm 1.653 in spacing

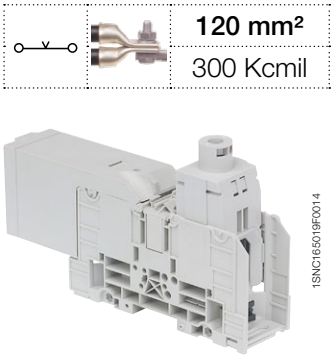


D120/42.AF

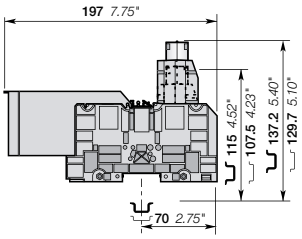


**42 mm** 1.653 in spacing

| | |
|---|---|
| | **120 mm²** |
| | 300 Kcmil |

### Description

- Rated cross section up to 240 mm² / 500 Kcmil, IP20 protection cover,
- Holding foot on DIN 3 rail with two position for easy mounting, lug mounting in accordance with NF C 20-130 and DIN 46234, various marking options, rail or base mounting.

### Ordering details

| Description | | Color | Type | Part Number | | Pkg qty | Weight (1 pce) g |
|---|---|---|---|---|---|---|---|
| **Feed-through** | 1 stud M10 + 1 wire-clamp with covers | Grey | D120/42.AF | 1SNA190008R0700 | | 1 | 423.00 |

### Main technical data

| Connecting capacity | | NFC | DIN | UL | CSA |
|---|---|---|---|---|---|
| **Lugs** | Rigid - Solid / Stranded | 6-150 mm² | 6-120 mm² | 300 Kcmil | |
| | Flexible | 6-120 mm² | | | |
| | Gauge | C8 | | | |

| | | IEC | UL | CSA |
|---|---|---|---|---|
| **Screw clamp** | Rigid - Solid / Stranded | 6-150 mm² | 10 AWG-300 Kcmil | |
| | Flexible | 6-120 mm² | | |
| | Gauge | | | |

| | IEC | UL | CSA |
|---|---|---|---|
| **Bar** | | | |
| **Rated current** | 269 A | 240 A | |
| **Rated cross section** | 120 mm² | 300 Kcmil | |
| **Rated voltage** | 1000 V | 600 V | |
| **Impulse withstand voltage** | 8000 V | | |

### Mounting instructions

| | |
|---|---|
| Rail | TH 35-7.5, TH 35-15 |
| Lugs Tool | Wrench H17 mm |
| Torque | 10 - 20 N.m<br>87 - 174 lb.in |
| Jumper screw Tool | Allen key 6 mm<br>0.236 in |
| Torque | 6 - 12 N.m<br>52 - 104 lb.in |
| Screw clamp Tool | Allen key 8 mm<br>0.315 in |
| Torque | 11 ± 1 N.m<br>97.36 ± 8.85 lb.in |
| Wire stripping length | 38 mm<br>1.496 in |

The connecting capacity data for one Rigid - Solid / Stranded - Flexible conductor (when applicable) is a mandatory information required by IEC, UL and CSA standards.
All other data are provided as supplementary information only. For more details, please consult our CB, UL or CSA certificates and technical datasheet available on http://www.te.com

RoHS — USR CNR — Gost R

### Accessories

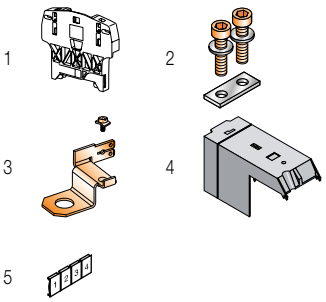


| | Description | | | Color | Type | Part Number | | Pkg qty | Weight (1 pce) g |
|---|---|---|---|---|---|---|---|---|---|
| 1 | **End stops** | 12 mm | 0.472 in | Grey | BAZH1 | 1SNK900102R0000 | | 50 | 24.00 |
| 2 | **Jumper bars** | 2 poles | | | BJS42-2 | 1SNA205776R1700 | | 5 | 93.00 |
| | | 3 poles | | | BJS42-3 | 1SNA205777R1000 | | 5 | 153.00 |
| 3 | **Splitters** | For 6.35x0.8mm faston clips and screws | | | DRF10 | 1SNA205769R2000 | | 10 | 7.00 |
| 4 | **Protecting covers** | IP20 rotating protecting cover | | Grey | CPUF120 | 1SNA190018R2000 | | 2 | 24.00 |
| 5 | **Terminal block markers** | Blank card | | White | RC810 | 1SNA234000R0200 | | 1 | 8.20 |

Complete list of accessories is indicated in the terminal block datasheet.
Some accessories such as jumper bars may modify the terminal block's ratings: complete information in the accessories catalogue pages.

Technical data valid for copper conductors only.

1SNC165008S0201 - Rev. C

# D185/55.AF power terminal blocks
## Feed-through - 55 mm 2.165 in spacing

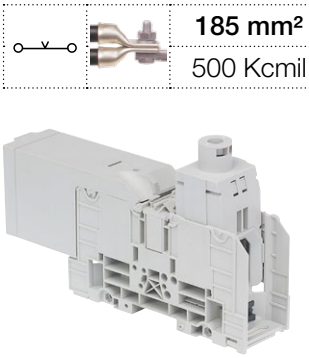

**185 mm²**
500 Kcmil




D185/55.AF

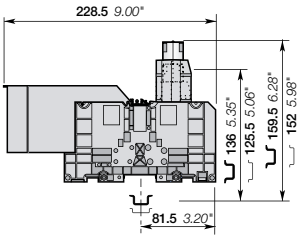


**55 mm** 2.165 in spacing

### Description

- Rated cross section up to 240 mm² / 500 Kcmil, IP20 protection cover,
- Holding foot on DIN 3 rail with two position for easy mounting, lug mounting in accordance with NF C 20-130 and DIN 46234, various marking options, rail or base mounting.

### Ordering details

| Description | | Color | Type | Part Number | | Pkg qty | Weight (1 pce) g |
|---|---|---|---|---|---|---|---|
| **Feed-through** | 1 stud M12 + 1 wire-clamp with covers | Grey | D185/55.AF | 1SNA190009R0000 | | 1 | 937.00 |

### Main technical data

| Connecting capacity | | NFC | DIN | UL | CSA |
|---|---|---|---|---|---|
| **Lugs** | Rigid - Solid / Stranded | 25-240 mm² | 6-185 mm² | 500 Kcmil | |
| | Flexible | 6-185 mm² | | | |
| | Gauge | C11 | | | |

| | | IEC | UL | CSA |
|---|---|---|---|---|
| **Screw clamp** | Rigid - Solid / Stranded | 25-240 mm² | 4 AWG-500 Kcmil | |
| | Flexible | 25-185 mm² | | |
| | Gauge | | | |

| | IEC | UL | CSA |
|---|---|---|---|
| **Bar** | | | |
| **Rated current** | 353 A | 320 A | |
| **Rated cross section** | 185 mm² | 500 Kcmil | |
| **Rated voltage** | 1000 V | 600 V | |
| **Impulse withstand voltage** | 8000 V | | |

### Mounting instructions

| | | |
|---|---|---|
| Rail | | TH 35-7.5, TH 35-15 |
| Lugs Tool | | Wrench H24 mm |
| Torque | | 14 - 30 N.m 123.9 - 265.5 lb.in |
| Jumper screw Tool | | Allen key 6 mm 0.236 in |
| Torque | | 6 - 12 N.m 53.1 - 106.2 lb.in |
| Screw clamp Tool | | Allen key 10 mm 0.394 in |
| Torque | | 15 ± 1 N.m 132.7 ± 8.85 lb.in |
| Wire stripping length | | 47 mm 1.850 in |

The connecting capacity data for one Rigid - Solid / Stranded - Flexible conductor (when applicable) is a mandatory information required by IEC, UL and CSA standards.
All other data are provided as supplementary information only. For more details, please consult our CB, UL or CSA certificates and technical datasheet available on http://www.te.com

RoHS — RoHS; USR CNR; Gost R

### Accessories

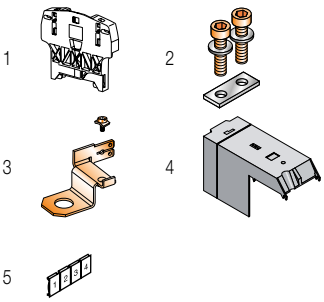


| | Description | | | Color | Type | Part Number | | Pkg qty | Weight (1 pce) g |
|---|---|---|---|---|---|---|---|---|---|
| 1 | **End stops** | 12 mm | 0.472 in | Grey | BAZH1 | 1SNK900102R0000 | | 50 | 24.00 |
| 2 | **Jumper bars** | 2 poles | | | BJS551-2 | 1SNA205778R2100 | | 5 | 158.00 |
| | | 3 poles | | | BJS551-3 | 1SNA205779R2200 | | 5 | 266.00 |
| 3 | **Splitters** | For 6.35x0.8mm faston clips and screws | | | DRF12 | 1SNA205770R2500 | | 10 | 8.00 |
| 4 | **Protecting covers** | IP20 rotating protecting cover | | Grey | CPUF185 | 1SNA190019R2100 | | 2 | 40.00 |
| 5 | **Terminal block markers** | Blank card | | White | RC810 | 1SNA234000R0200 | | 1 | 8.20 |

Complete list of accessories is indicated in the terminal block datasheet.
Some accessories such as jumper bars may modify the terminal block's ratings: complete information in the accessories catalogue pages.

Technical data valid for copper conductors only.

1SNC165009S0201 - Rev. C

## Main dimensions mm

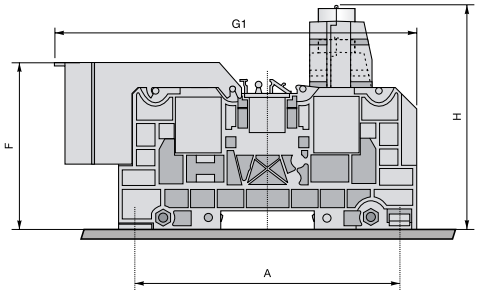


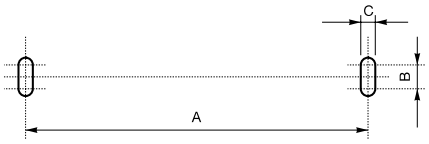


**D35/27.AF - D70/32.AF - D120/42.AF**
**D35/27.FF - D70/32.FF - D120/42.FF**

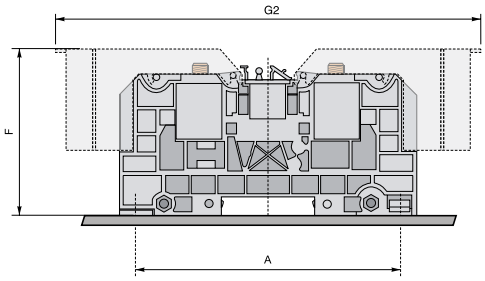


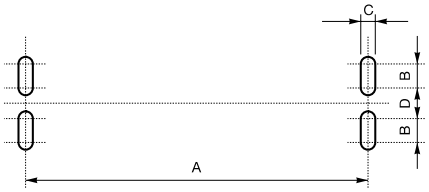


**D185/55.AF**
**D185/55.FF - D300/55.FF**

| Type | Mounting with: | A | B | C | D | F | G1 | G2 | H |
|---|---|---|---|---|---|---|---|---|---|
| | | Dimensions mm | | | | | | | |
| D35/27... | 2 Screws | 100.5 | 7.5 | 6.5 | / | 63.5 | 136.5 | 160 | 82.5 |
| D70/32... | 2 Screws | 120 | 7.5 | 6.5 | / | 72.5 | 165 | 190.5 | 105.7 |
| D120/42... | 2 Screws | 120 | 7.5 | 6.5 | / | 83.5 | 197 | 255.5 | 129.7 |
| D185/55... | 4 Screws | 135 | 13.5 | 6.5 | 8.5 | 103.5 | 228.5 | 295 | 151.5 |
| D300/55... | 4 Screws | 135 | 13.5 | 6.5 | 8.5 | 105 | / | 295 | / |

## Marking

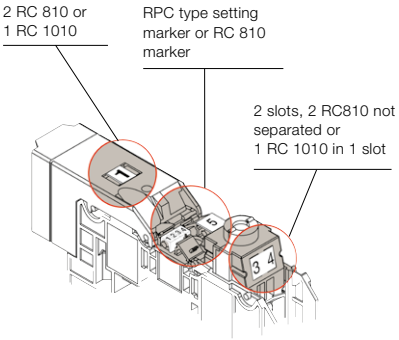


## Jumper bar

- move the marker holders up
- cut out the partition
- screw the jumper bar

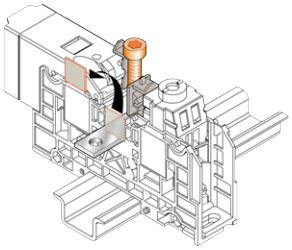

## Locking foot operating with screwdriver DIA. 4 mm

Center opening (to be made after jumper bar has been removed) "monostable action".

As soon as the screwdriver is removed, the locking foot comes back to closed position

Side opening with
2 positions.
The locking foot remains
in open or closed position.

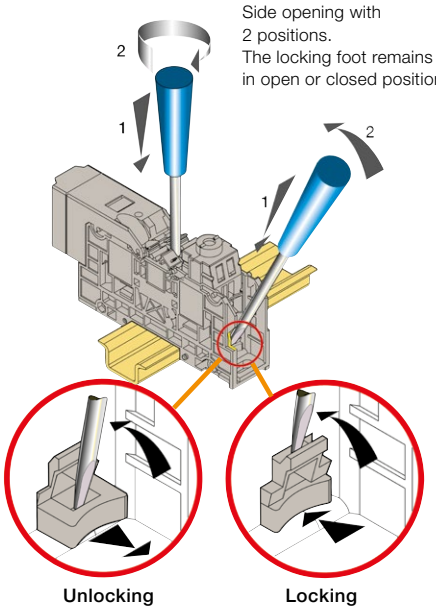


## Locking

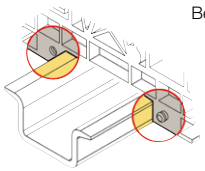

Between blocks with pins

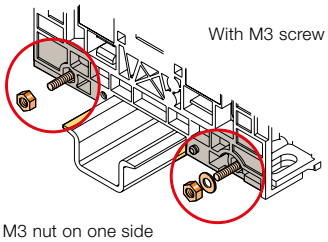

With M3 screw

M3 nut on one side
M3 nut + washer on the other side

## Mounting of the derivative system

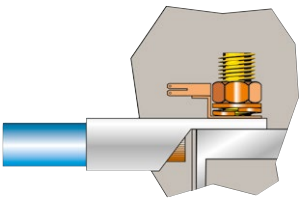

1SNC165014S0201

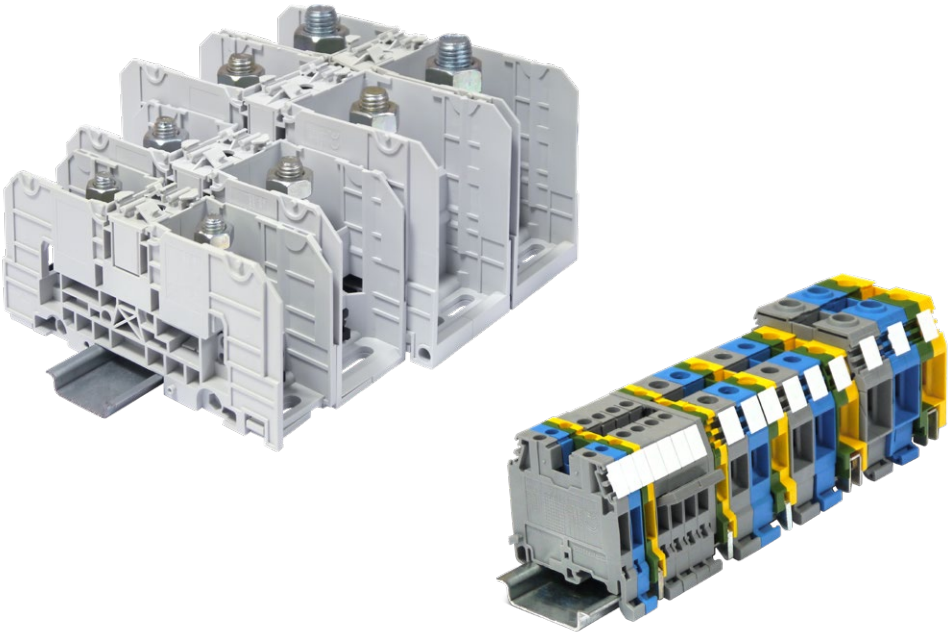

# Index
## Part number classification


| Order code | Type | Page |
|---|---|---|
| 1SNA007865R2600 | FC2 | 13 |
| 1SNA008288R1500 | FU520 | 74 |
| 1SNA008289R1600 | FU520 | 74 |
| 1SNA008290R1300 | FU520 | 74 |
| 1SNA008291R0000 | FU520 | 74 |
| 1SNA008292R0100 | FU520 | 74 |
| 1SNA103189R2600 | SCD | 52 |
| 1SNA103588R2600 | SCFT1 | 65 |
| 1SNA105001R2700 | M4/6 | 14 |
| 1SNA105002R2000 | M4/6 | 14 |
| 1SNA105004R2200 | M6/8 | 18 |
| 1SNA105031R1400 | M4/6 | 14 |
| 1SNA105032R1500 | M4/6 | 14 |
| 1SNA105044R2100 | M4/6.D2 | 44 |
| 1SNA105045R2200 | M4/6.D2 | 44 |
| 1SNA105046R2300 | M4/6.D2 | 44 |
| 1SNA105047R2400 | M4/6.D2 | 44 |
| 1SNA105048R0500 | M4/6.D2 | 44 |
| 1SNA105049R0600 | M4/6.D2 | 44 |
| 1SNA105051R2000 | M4/6 | 14 |
| 1SNA105052R2100 | MA2.5/5 | 12 |
| 1SNA105053R2200 | M4/6.SNB | 58 |
| 1SNA105055R2400 | M6/8.SNB | 60 |
| 1SNA105075R2000 | MA2.5/5 | 12 |
| 1SNA105077R2200 | MA2.5/5 | 12 |
| 1SNA105116R1600 | M4/6 | 14 |
| 1SNA105118R2000 | M6/8 | 18 |
| 1SNA105120R2600 | M10/10 | 20 |
| 1SNA105124R1600 | M35/16 | 23 |
| 1SNA105128R2200 | M6/8.1 | 19 |
| 1SNA105129R2300 | M16/12 | 22 |
| 1SNA105133R1700 | BNF52 | 63 |
| 1SNA105135R1100 | M4/8.SF2 | 75 |
| 1SNA105141R2700 | M6/8.STP | 66 |
| 1SNA105142R2000 | M6/8.STP | 66 |
| 1SNA105208R1300 | M4/6.1 | 15 |
| 1SNA105209R1400 | M4/6 | 14 |
| 1SNA105486R1200 | MA2.5/5 | 12 |
| 1SNA113003R1000 | SCM6 | 14 |
| 1SNA113102R1000 | SCF12 | 22 |
| 1SNA113137R0200 | FEMT1 | 65 |
| 1SNA113373R2600 | FEM8 | 60 |
| 1SNA113482R0500 | SCM6D | 44 |
| 1SNA113542R1000 | PC5-2 | 12 |
| 1SNA113544R1200 | PC5-10 | 12 |
| 1SNA113546R1400 | PC6-2 | 14 |
| 1SNA113548R2600 | PC6-10 | 14 |
| 1SNA113550R2400 | EIP | 12 |
| 1SNA113629R2700 | FEMT2 | 69 |
| 1SNA114205R2000 | AD2.5 | 53 |
| 1SNA114522R0500 | SCFT2 | 69 |
| 1SNA114778R0500 | FEMT4 | 68 |
| 1SNA114825R0500 | SCFM6 | 12 |
| 1SNA114994R0700 | FEM62 | 58 |
| 1SNA115116R0700 | M4/6 | 14 |
| 1SNA115118R1100 | M6/8 | 18 |
| 1SNA115120R1700 | M10/10 | 20 |
| 1SNA115124R0700 | M35/16 | 23 |
| 1SNA115126R0100 | M4/6.D2.1 | 45 |
| 1SNA115129R1400 | M16/12 | 22 |
| 1SNA115166R1100 | M4/6.D1 | 47 |
| 1SNA115192R0400 | M4/6.4 | 15 |
| 1SNA115204R2000 | M4/6.D1.1 | 46 |
| 1SNA115217R1400 | M4/6.2 | 15 |
| 1SNA115218R2500 | M6/8.2 | 19 |
| 1SNA115219R2600 | M6/8.4 | 19 |
| 1SNA115236R1700 | M6/8.ST | 69 |
| 1SNA115237R1000 | M6/8.ST1 | 70 |
| 1SNA115239R2200 | M6/8.ST3 | 71 |

| Order code | Type | Page |
|---|---|---|
| 1SNA115243R2600 | M6/8.ST7 | 69 |
| 1SNA115259R0600 | M4/6.1 | 15 |
| 1SNA115260R0300 | M6/8.1 | 19 |
| 1SNA115261R2000 | M10/10.1 | 21 |
| 1SNA115271R2200 | M4/6.D2 | 44 |
| 1SNA115277R2000 | M6/8.STP | 66 |
| 1SNA115322R1500 | M4/6.D2.2 | 45 |
| 1SNA115359R0200 | M6/8.STA | 68 |
| 1SNA115435R0700 | M4/6.SB | 62 |
| 1SNA115436R0000 | M6/8.SB | 63 |
| 1SNA115438R1200 | M4/6.SNBT | 59 |
| 1SNA115468R2000 | M4/6.3A | 16 |
| 1SNA115479R2300 | M4/6.4A | 17 |
| 1SNA115485R0200 | MA2.5/5.1 | 13 |
| 1SNA115486R0300 | MA2.5/5 | 12 |
| 1SNA115490R1300 | MA2.5/5.D2 | 42 |
| 1SNA115491R0000 | MA2.5/5.D2.1 | 43 |
| 1SNA115495R0400 | M4/6.SNBT | 59 |
| 1SNA115497R0600 | M6/8.D2.1 | 49 |
| 1SNA115498R1700 | M6/8.D1 | 49 |
| 1SNA115500R2500 | M6/8.STP3 | 65 |
| 1SNA115501R1200 | M6/8.D2 | 48 |
| 1SNA115505R1600 | MA2.5/5.SNBTA | 57 |
| 1SNA115523R0700 | M4/8 | 74 |
| 1SNA115529R1500 | M6/8.STP1 | 65 |
| 1SNA115530R1200 | MA2.5/5.D1.1 | 43 |
| 1SNA115541R1100 | D2.5/6.DA | 51 |
| 1SNA115561R1500 | M4/6.D2.SNBT | 61 |
| 1SNA115604R2100 | M4/8.D2.SF | 80 |
| 1SNA115643R2700 | D2.5/6.DPA1 | 50 |
| 1SNA115646R2200 | M4/8.D2.SFL | 81 |
| 1SNA115647R2300 | M4/8.D2.SFD | 81 |
| 1SNA115657R2500 | M4/8.SF | 74 |
| 1SNA115659R0700 | M4/8.SN | 78 |
| 1SNA115661R2100 | M4/8.SFL | 77 |
| 1SNA115662R2200 | M4/8.SFT | 75 |
| 1SNA115663R2300 | M4/8.SFD | 77 |
| 1SNA115665R2500 | M4/8.SFDT | 77 |
| 1SNA115667R2700 | M4/8.SFLT | 77 |
| 1SNA115668R0000 | M4/8.SNT | 78 |
| 1SNA115686R1300 | M4/6.SNB | 58 |
| 1SNA115688R2500 | M6/8.SNB | 60 |
| 1SNA115699R2000 | MA2.5/5.SNB | 56 |
| 1SNA115700R0500 | MA2.5/5.SNBT | 57 |
| 1SNA115701R2200 | MA2.5/5.SNBT | 57 |
| 1SNA115702R2300 | M4/6.D2.SBT | 64 |
| 1SNA115935R0400 | M4/8.SFD3 | 76 |
| 1SNA115936R0500 | M4/8.D2.SFD3 | 81 |
| 1SNA115971R1000 | M6/8.ST1.IP20 | 72 |
| 1SNA115986R0000 | M4/6.SNB | 58 |
| 1SNA115987R0100 | M4/6.SNBT | 59 |
| 1SNA116538R1700 | PC8-2 | 18 |
| 1SNA116539R1000 | PC8-3 | 60 |
| 1SNA116540R2500 | PC8-4 | 60 |
| 1SNA116576R1500 | FEM3A | 16 |
| 1SNA116591R0500 | FEMS6D | 61 |
| 1SNA116629R2200 | FEM4A | 17 |
| 1SNA116656R2500 | FEM8D1 | 48 |
| 1SNA116720R2100 | SCMA5D | 42 |
| 1SNA116728R2500 | SCMA5 | 12 |
| 1SNA116771R2000 | FED3E | 50 |
| 1SNA116795R1100 | SCFCV1-2 | 12 |
| 1SNA116797R1300 | SCFCV4 | 24 |
| 1SNA116854R1400 | BNSV62 | 64 |
| 1SNA116913R0700 | FEM8D2S | 80 |
| 1SNA116924R0200 | BNF52 | 63 |
| 1SNA116926R0400 | BNCT82 | 63 |
| 1SNA116927R0500 | BNSV82 | 63 |
| 1SNA116951R1500 | FEM8S | 74 |

| Order code | Type | Page |
|---|---|---|
| 1SNA116979R2100 | FEMSTA | 68 |
| 1SNA118368R1600 | FEM6 | 12 |
| 1SNA118495R1700 | SCF6D | 44 |
| 1SNA118499R2300 | FEM6D | 42 |
| 1SNA118618R0100 | FEM12 | 22 |
| 1SNA118707R0300 | SCF6 | 12 |
| 1SNA125116R0100 | M4/6.N | 14 |
| 1SNA125118R1300 | M6/8.N | 18 |
| 1SNA125120R1100 | M10/10.N | 20 |
| 1SNA125124R0100 | M35/16.N | 23 |
| 1SNA125126R0300 | M4/6.D2.1.N | 45 |
| 1SNA125129R1600 | M16/12.N | 22 |
| 1SNA125166R1300 | M4/6.D1.N | 47 |
| 1SNA125204R2200 | M4/6.D1.1N | 46 |
| 1SNA125260R0500 | M6/8.1.N | 19 |
| 1SNA125271R2400 | M4/6.D2.N | 44 |
| 1SNA125468R2200 | M4/6.3A.N | 16 |
| 1SNA125479R2500 | M4/6.4A.N | 17 |
| 1SNA125485R0400 | MA2.5/5.1 | 13 |
| 1SNA125486R0500 | MA2.5/5.N | 12 |
| 1SNA125490R1500 | MA2.5/5.D2.N | 42 |
| 1SNA125505R1000 | MA2.5/5.SNBTA | 57 |
| 1SNA163043R2100 | AL2 | 15 |
| 1SNA163046R2400 | AL2 | 13 |
| 1SNA163070R0000 | AL2 | 45 |
| 1SNA163261R0000 | AL3 | 15 |
| 1SNA163311R2200 | PC61-10 | 44 |
| 1SNA163313R2400 | PC8-10 | 18 |
| 1SNA163315R2600 | PC10-10 | 20 |
| 1SNA164581R1300 | BJS8 | 67 |
| 1SNA164582R1400 | BJS8 | 67 |
| 1SNA164583R1500 | BJS8 | 67 |
| 1SNA164950R0000 | AL2 | 43 |
| 1SNA165111R1400 | M35/16.P | 23 |
| 1SNA165113R1600 | M4/6.P | 14 |
| 1SNA165114R1700 | M6/8.P | 18 |
| 1SNA165115R1000 | M10/10.P | 20 |
| 1SNA165130R2300 | M16/12.P | 22 |
| 1SNA165488R2700 | MA2.5/5.P | 12 |
| 1SNA165809R0100 | D4/6.P | 31 |
| 1SNA165830R2100 | D6/8.P | 35 |
| 1SNA165909R0500 | D2.5/5.P | 29 |
| 1SNA167319R0600 | AL2 | 52 |
| 1SNA167860R0100 | FC4 | 15 |
| 1SNA167927R1000 | FC4-1 | 65 |
| 1SNA168401R0300 | EV8S | 69 |
| 1SNA168520R0500 | BJM8 | 82 |
| 1SNA168521R2200 | BJM8 | 82 |
| 1SNA168522R2300 | BJM8 | 82 |
| 1SNA168556R0500 | FU633 | 84 |
| 1SNA168558R1700 | FU633 | 84 |
| 1SNA168560R1500 | FU633 | 84 |
| 1SNA168564R0500 | TGA13 | 84 |
| 1SNA168565R0600 | TGA13 | 84 |
| 1SNA168566R0700 | TGA13 | 84 |
| 1SNA168672R1100 | TGA8 | 74 |
| 1SNA168673R1200 | TGA8 | 74 |
| 1SNA168674R1300 | TGA8 | 74 |
| 1SNA168675R1400 | ANT | 74 |
| 1SNA168974R0000 | BJM8 | 82 |
| 1SNA171018R2000 | EXBN2 | 62 |
| 1SNA173217R2600 | BJM62 | 52 |
| 1SNA173510R2000 | PC13-10 | 84 |
| 1SNA173523R1100 | PC81-10 | 74 |
| 1SNA173530R2400 | CBM5D | 42 |
| 1SNA173627R2100 | EL6 | 12 |
| 1SNA173888R2000 | BP8.A4 | 19 |
| 1SNA174789R0500 | BJS8-20 | 67 |
| 1SNA176259R1300 | ITV5 | 42 |

# Index

## Part number classification


| Order code | Type | Page |
|---|---|---|
| 1SNA176278R1600 | BJMI5-2 | 12 |
| 1SNA176279R1700 | BJMI5-3 | 12 |
| 1SNA176280R0500 | BJMI5-4 | 12 |
| 1SNA176281R2200 | BJMI5-5 | 12 |
| 1SNA176282R2300 | BJMI5-10 | 12 |
| 1SNA176663R0000 | BJMI6-2 | 14 |
| 1SNA176664R0100 | BJMI6-3 | 14 |
| 1SNA176665R0200 | BJMI6-4 | 14 |
| 1SNA176666R0300 | BJMI6-5 | 14 |
| 1SNA176667R0400 | BJMI6-10 | 14 |
| 1SNA176669R1600 | BJMI8-2 | 18 |
| 1SNA176670R1300 | BJMI8-3 | 18 |
| 1SNA176671R0000 | BJMI8-4 | 18 |
| 1SNA176672R0100 | BJMI8-5 | 18 |
| 1SNA176673R0200 | BJMI8-10 | 18 |
| 1SNA176675R0400 | BJMI10-2 | 20 |
| 1SNA176676R0500 | BJMI10-3 | 20 |
| 1SNA176677R0600 | BJMI10-4 | 20 |
| 1SNA176678R1700 | BJMI10-5 | 20 |
| 1SNA176679R1000 | BJMI10-10 | 20 |
| 1SNA176736R2100 | BJMI5D-2 | 42 |
| 1SNA176737R2200 | BJMI5D-3 | 42 |
| 1SNA176738R0300 | BJMI5D-4 | 42 |
| 1SNA176739R0400 | BJMI5D-5 | 42 |
| 1SNA176740R1100 | BJMI5D-10 | 42 |
| 1SNA176791R2100 | CPV4-5 | 24 |
| 1SNA176816R1200 | CPV1-2 | 12 |
| 1SNA177812R1700 | EL61 | 50 |
| 1SNA178024R2500 | BJD6 | 50 |
| 1SNA178025R2600 | BJD6 | 50 |
| 1SNA178026R2700 | BJD6 | 50 |
| 1SNA178027R2000 | BJD6 | 50 |
| 1SNA178032R2500 | BJD6 | 50 |
| 1SNA178033R2600 | BJD6 | 50 |
| 1SNA178408R1400 | CBD2S | 64 |
| 1SNA178745R1400 | CBM5 | 12 |
| 1SNA179371R1600 | CN5 | 74 |
| 1SNA179623R0300 | BJDP1 | 14 |
| 1SNA179624R0400 | BJDP2 | 22 |
| 1SNA179625R0500 | BJDP3 | 14 |
| 1SNA179626R0600 | BJMI12-2 | 22 |
| 1SNA179628R1000 | BJMI12-3 | 22 |
| 1SNA179629R1100 | BJMI12-4 | 22 |
| 1SNA179630R1600 | BJMI12-5 | 22 |
| 1SNA179631R0300 | BJMI12-10 | 22 |
| 1SNA179668R2000 | BJMI6D-2 | 44 |
| 1SNA179669R2100 | BJMI6D-3 | 44 |
| 1SNA179670R2600 | BJMI6D-4 | 44 |
| 1SNA179671R1300 | BJMI6D-5 | 44 |
| 1SNA179672R1400 | BJMI6D-10 | 44 |
| 1SNA179726R0200 | AJS9 | 69 |
| 1SNA187312R1400 | CPM | 12 |
| 1SNA190001R2000 | D35/27.FF | 91 |
| 1SNA190002R2100 | D70/32.FF | 92 |
| 1SNA190003R2200 | D120/42.FF | 93 |
| 1SNA190004R2300 | D185/55.FF | 94 |
| 1SNA190005R2400 | D300/55.FF | 95 |
| 1SNA190006R2500 | D35/27.AF | 96 |
| 1SNA190007R2600 | D70/32.AF | 97 |
| 1SNA190008R0700 | D120/42.AF | 98 |
| 1SNA190009R0000 | D185/55.AF | 99 |
| 1SNA190016R1600 | CPUF35 | 91 |
| 1SNA190017R1700 | CPUF70 | 92 |
| 1SNA190018R2000 | CPUF120 | 93 |
| 1SNA190019R2100 | CPUF185 | 94 |
| 1SNA195116R0000 | M4/6 | 14 |
| 1SNA195118R1200 | M6/8 | 18 |
| 1SNA195120R1000 | M10/10 | 20 |
| 1SNA195124R0000 | M35/16 | 23 |

| Order code | Type | Page |
|---|---|---|
| 1SNA195129R1500 | M16/12 | 22 |
| 1SNA195192R0500 | M4/6.4 | 15 |
| 1SNA195260R0400 | M6/8.1 | 19 |
| 1SNA195271R2300 | M4/6.D2 | 44 |
| 1SNA195438R1300 | M4/6.SNBT | 59 |
| 1SNA195486R0400 | MA2.5/5 | 12 |
| 1SNA195490R1400 | MA2.5/5.D2 | 42 |
| 1SNA195501R1300 | M6/8.D2 | 48 |
| 1SNA195637R1200 | M4/6.3A.P | 16 |
| 1SNA195638R2300 | M4/6.4A.P | 17 |
| 1SNA195686R1400 | M4/6.SNB | 58 |
| 1SNA196789R2400 | BNSTP2 | 65 |
| 1SNA196792R1700 | BNSTP1 | 65 |
| 1SNA196854R1500 | BNSV62 | 62 |
| 1SNA196924R0300 | BNF52 | 63 |
| 1SNA196926R0500 | BNCT82 | 63 |
| 1SNA196927R0600 | BNSV82 | 63 |
| 1SNA196966R1500 | BNF652-D1-BE | 62 |
| 1SNA196967R1600 | BNF652L-BE | 62 |
| 1SNA196998R1600 | BNF652 | 62 |
| 1SNA196999R1700 | BNF652D-BE | 62 |
| 1SNA199095R1300 | ML10/13.SF | 84 |
| 1SNA199105R2200 | ML10/13.SN | 84 |
| 1SNA199166R2600 | ML10/13.SFD | 85 |
| 1SNA199168R0000 | ML10/13.SFL | 85 |
| 1SNA199219R0300 | D4/6.T1 | 53 |
| 1SNA199220R0000 | D4/6.P.T1 | 52 |
| 1SNA199635R2400 | FEM13U | 84 |
| 1SNA205767R1600 | DRF6 | 91 |
| 1SNA205768R2700 | DRF8 | 92 |
| 1SNA205769R2000 | DRF10 | 93 |
| 1SNA205770R2500 | DRF12 | 94 |
| 1SNA205771R1200 | DRF16 | 95 |
| 1SNA205772R1300 | BJS27-2 | 91 |
| 1SNA205773R1400 | BJS27-3 | 91 |
| 1SNA205774R1500 | BJS32-2 | 92 |
| 1SNA205775R1600 | BJS32-3 | 92 |
| 1SNA205776R1700 | BJS42-2 | 93 |
| 1SNA205777R1000 | BJS42-3 | 93 |
| 1SNA205778R2100 | BJS551-2 | 94 |
| 1SNA205779R2200 | BJS551-3 | 94 |
| 1SNA206053R0700 | BJMI31.2 | 26 |
| 1SNA206054R0000 | BJMI31.3 | 26 |
| 1SNA206126R2500 | BJMI36.2 | 27 |
| 1SNA206223R0600 | BJMI36.3 | 27 |
| 1SNA206394R0200 | EV6I | 67 |
| 1SNA206404R0500 | M4/6 | 14 |
| 1SNA206538R0200 | M4/6.SNBT | 59 |
| 1SNA206680R1500 | AJS9-1 | 69 |
| 1SNA206681R0200 | AJS9-2 | 69 |
| 1SNA206682R0300 | AJS9-3 | 69 |
| 1SNA206683R0400 | AJS9-4 | 69 |
| 1SNA206720R1400 | AJS9-5 | 69 |
| 1SNA206721R0100 | AL4-M3 | 15 |
| 1SNA206723R0300 | AL4-M4 | 23 |
| 1SNA231000R0700 | RC510 | 12 |
| 1SNA232000R0000 | RC65 | 50 |
| 1SNA233000R0100 | RC610 | 14 |
| 1SNA234000R0200 | RC810 | 18 |
| 1SNA238000R1600 | RC1010 | 20 |
| 1SNA299486R2400 | BFAUTO | 62 |
| 1SNA299683R0100 | D4/6.T3 | 52 |
| 1SNA299684R0200 | D4/6.T3.P | 53 |
| 1SNA399704R1200 | D240/36.D10 | 27 |
| 1SNA399706R1400 | D240/36.D10.N | 27 |
| 1SNA399715R0400 | D150/31.D10 | 26 |
| 1SNA399717R0600 | D150/31.D10.N | 26 |
| 1SNA399787R0500 | CPBP2 | 27 |
| 1SNA399788R1600 | CPBP1 | 26 |

| Order code | Type | Page |
|---|---|---|
| 1SNA400146R0000 | BNS6DG1 | 62 |
| 1SNA400184R2700 | MA2.5/5 | 12 |
| 1SNA400186R2100 | M6/8 | 18 |
| 1SNA400187R2200 | M6/8 | 18 |
| 1SNA400188R0300 | M10/10 | 20 |
| 1SNA400189R0400 | M10/10 | 20 |
| 1SNA400190R0100 | M10/10 | 20 |
| 1SNA400191R2600 | M16/12 | 22 |
| 1SNA400192R2700 | M16/12 | 22 |
| 1SNA400193R2000 | M16/12 | 22 |
| 1SNA400194R2100 | M35/16 | 23 |
| 1SNA400195R2200 | M35/16 | 23 |
| 1SNA400196R2300 | M35/16 | 23 |
| 1SNA400239R1500 | M6/8 | 18 |
| 1SNA400270R2000 | D4/8.D2.P.SF | 82 |
| 1SNA400271R1500 | D4/8.D2.P.SFL | 83 |
| 1SNA400272R1600 | D4/8.D2.P.SFD | 83 |
| 1SNA400273R1700 | FEM8D2S1 | 82 |
| 1SNA400305R1000 | D70/22 | 24 |
| 1SNA400306R1100 | D70/22.N | 24 |
| 1SNA400370R2400 | D95/26 | 25 |
| 1SNA400371R1100 | D95/26.N | 25 |
| 1SNA400620R1700 | D95/26.P | 25 |
| 1SNA400711R0600 | PC8-R1 | 69 |
| 1SNA400712R0700 | PC8-R2 | 69 |
| 1SNA400713R0000 | PC8-R3 | 69 |
| 1SNA400724R0300 | PC8-R4 | 69 |
| 1SNA400772R1300 | D70/22.P | 24 |
| 1SNA400778R0000 | D150/31.D10.YL | 26 |
| 1SNA400779R0000 | D240/36.D10.YL | 27 |
| 1SNA400789R0000 | D70/22.YL | 24 |
| 1SNA400791R0000 | D95/26.YL | 25 |
| 1SNK900001R0000 | BAM4 | 12 |
| 1SNK900002R0000 | BAZ1 | 12 |
| 1SNK900102R0000 | BAZH1 | 24 |
| 1SNK900652R0000 | SC-JB8-2 | 69 |
| 1SNK900653R0000 | SC-JB8-3 | 69 |
| 1SNK900654R0000 | SC-JB8-4 | 69 |
| 1SNK916302R0000 | JB16-2 | 23 |
| 1SNK916303R0000 | JB16-3 | 23 |
| 1SNK916304R0000 | JB16-4 | 23 |
| 1SNK916305R0000 | JB16-5 | 23 |
| 1SNK916310R0000 | JB16-10 | 23 |
| 1SNK922302R0000 | JB22-2 | 24 |
| 1SNK922303R0000 | JB22-3 | 24 |
| 1SNK922305R0000 | JB22-5 | 24 |
| 1SNK922310R0000 | JB22-10 | 24 |
| 1SNK926302R0000 | JB26-2 | 25 |
| 1SNK926303R0000 | JB26-3 | 25 |
| 1SNK926305R0000 | JB26-5 | 25 |
| 1SNK926310R0000 | JB26-10 | 25 |

# Index
## Type classification


| Type | Order code | Page |
|---|---|---|
| AD2.5 | 1SNA114205R2000 | 53 |
| AJS9 | 1SNA179726R0200 | 69 |
| AJS9-1 | 1SNA206680R1500 | 69 |
| AJS9-2 | 1SNA206681R0200 | 69 |
| AJS9-3 | 1SNA206682R0300 | 69 |
| AJS9-4 | 1SNA206683R0400 | 69 |
| AJS9-5 | 1SNA206720R1400 | 69 |
| AL2 | 1SNA163043R2100 | 15 |
| | 1SNA163046R2400 | 13 |
| | 1SNA163070R0000 | 45 |
| | 1SNA164950R0000 | 43 |
| | 1SNA167319R0600 | 52 |
| AL3 | 1SNA163261R0000 | 15 |
| AL4-M3 | 1SNA206721R0100 | 15 |
| AL4-M4 | 1SNA206723R0300 | 23 |
| ANT | 1SNA168675R1400 | 74 |
| BAM4 | 1SNK900001R0000 | 12 |
| BAZ1 | 1SNK900002R0000 | 12, |
| BAZH1 | 1SNK900102R0000 | 24 |
| BFAUTO | 1SNA299486R2400 | 62 |
| BJD6 | 1SNA178024R2500 | 50 |
| | 1SNA178025R2600 | 50 |
| | 1SNA178026R2700 | 50 |
| | 1SNA178027R2000 | 50 |
| | 1SNA178032R2500 | 50 |
| | 1SNA178033R2600 | 50 |
| BJDP1 | 1SNA179623R0300 | 14 |
| BJDP2 | 1SNA179624R0400 | 22 |
| BJDP3 | 1SNA179625R0500 | 14 |
| BJM62 | 1SNA173217R2600 | 52 |
| BJM8 | 1SNA168520R0500 | 82 |
| | 1SNA168521R2200 | 82 |
| | 1SNA168522R2300 | 82 |
| | 1SNA168974R0000 | 82 |
| BJMI10-10 | 1SNA176679R1000 | 20 |
| BJMI10-2 | 1SNA176675R0400 | 20 |
| BJMI10-3 | 1SNA176676R0500 | 20 |
| BJMI10-4 | 1SNA176677R0600 | 20 |
| BJMI10-5 | 1SNA176678R1700 | 20 |
| BJMI12-10 | 1SNA179631R0300 | 22 |
| BJMI12-2 | 1SNA179626R0600 | 22 |
| BJMI12-3 | 1SNA179628R1000 | 22 |
| BJMI12-4 | 1SNA179629R1100 | 22 |
| BJMI12-5 | 1SNA179630R1600 | 22 |
| BJMI31.2 | 1SNA206053R0700 | 26 |
| BJMI31.3 | 1SNA206054R0000 | 26 |
| BJMI36.2 | 1SNA206126R2500 | 27 |
| BJMI36.3 | 1SNA206223R0600 | 27 |
| BJMI5-10 | 1SNA176282R2300 | 12 |
| BJMI5-2 | 1SNA176278R1600 | 12 |
| BJMI5-3 | 1SNA176279R1700 | 12 |
| BJMI5-4 | 1SNA176280R0500 | 12 |
| BJMI5-5 | 1SNA176281R2200 | 12 |
| BJMI5D-10 | 1SNA176740R1100 | 42 |
| BJMI5D-2 | 1SNA176736R2100 | 42 |
| BJMI5D-3 | 1SNA176737R2200 | 42 |
| BJMI5D-4 | 1SNA176738R0300 | 42 |
| BJMI5D-5 | 1SNA176739R0400 | 42 |
| BJMI6-10 | 1SNA176667R0400 | 14 |
| BJMI6-2 | 1SNA176663R0000 | 14 |
| BJMI6-3 | 1SNA176664R0100 | 14 |
| BJMI6-4 | 1SNA176665R0200 | 14 |
| BJMI6-5 | 1SNA176666R0300 | 14 |
| BJMI6D-10 | 1SNA179672R1400 | 44 |
| BJMI6D-2 | 1SNA179668R2000 | 44 |
| BJMI6D-3 | 1SNA179669R2100 | 44 |
| BJMI6D-4 | 1SNA179670R2600 | 44 |
| BJMI6D-5 | 1SNA179671R1300 | 44 |
| BJMI8-10 | 1SNA176673R0200 | 18 |

| Type | Order code | Page |
|---|---|---|
| BJMI8-2 | 1SNA176669R1600 | 18 |
| BJMI8-3 | 1SNA176670R1300 | 18 |
| BJMI8-4 | 1SNA176671R0000 | 18 |
| BJMI8-5 | 1SNA176672R0100 | 18 |
| BJS27-2 | 1SNA205772R1300 | 91 |
| BJS27-3 | 1SNA205773R1400 | 91 |
| BJS32-2 | 1SNA205774R1500 | 92 |
| BJS32-3 | 1SNA205775R1600 | 92 |
| BJS42-2 | 1SNA205776R1700 | 93 |
| BJS42-3 | 1SNA205777R1000 | 93 |
| BJS551-2 | 1SNA205778R2100 | 94 |
| BJS551-3 | 1SNA205779R2200 | 94 |
| BJS8 | 1SNA164581R1300 | 67 |
| | 1SNA164582R1400 | 67 |
| | 1SNA164583R1500 | 67 |
| BJS8-20 | 1SNA174789R0500 | 67 |
| BNCT82 | 1SNA116926R0400 | 63 |
| | 1SNA196926R0500 | 63 |
| BNF52 | 1SNA105133R1700 | 63 |
| | 1SNA116924R0200 | 63 |
| | 1SNA196924R0300 | 63 |
| BNF652 | 1SNA196998R1600 | 62 |
| BNF652-D1-BE | 1SNA196966R1500 | 62 |
| BNF652D-BE | 1SNA196999R1700 | 62 |
| BNF652L-BE | 1SNA196967R1600 | 62 |
| BNS6DG1 | 1SNA400146R0000 | 62 |
| BNSTP1 | 1SNA196792R1700 | 65 |
| BNSTP2 | 1SNA196789R2400 | 65 |
| BNSV62 | 1SNA116854R1400 | 64 |
| | 1SNA196854R1500 | 62 |
| BNSV82 | 1SNA116927R0500 | 63 |
| | 1SNA196927R0600 | 63 |
| BP8.A4 | 1SNA173888R2000 | 19 |
| CBD2S | 1SNA178408R1400 | 64 |
| CBM5 | 1SNA178745R1400 | 12 |
| CBM5D | 1SNA173530R2400 | 42 |
| CN5 | 1SNA179371R1600 | 74 |
| CPBP1 | 1SNA399788R1600 | 26 |
| CPBP2 | 1SNA399787R0500 | 27 |
| CPM | 1SNA187312R1400 | 12 |
| CPUF120 | 1SNA190018R2000 | 93 |
| CPUF185 | 1SNA190019R2100 | 94 |
| CPUF35 | 1SNA190016R1600 | 91 |
| CPUF70 | 1SNA190017R1700 | 92 |
| CPV1-2 | 1SNA176816R1200 | 12 |
| CPV4-5 | 1SNA176791R2100 | 24 |
| D120/42.AF | 1SNA190008R0700 | 98 |
| D120/42.FF | 1SNA190003R2200 | 93 |
| D150/31.D10 | 1SNA399715R0400 | 26 |
| D150/31.D10.N | 1SNA399717R0600 | 26 |
| D150/31.D10.YL | 1SNA400778R0000 | 26 |
| D185/55.AF | 1SNA190009R0000 | 99 |
| D185/55.FF | 1SNA190004R2300 | 94 |
| D2.5/5.P | 1SNA165909R0500 | 29 |
| D2.5/6.DA | 1SNA115541R1100 | 51 |
| D2.5/6.DPA1 | 1SNA115643R2700 | 50 |
| D240/36.D10 | 1SNA399704R1200 | 27 |
| D240/36.D10.N | 1SNA399706R1400 | 27 |
| D240/36.D10.YL | 1SNA400779R0000 | 27 |
| D300/55.FF | 1SNA190005R2400 | 95 |
| D35/27.AF | 1SNA190006R2500 | 96 |
| D35/27.FF | 1SNA190001R2000 | 91 |
| D4/6.P | 1SNA165809R0100 | 31 |
| D4/6.P.T1 | 1SNA199220R0000 | 52 |
| D4/6.T1 | 1SNA199219R0300 | 53 |
| D4/6.T3 | 1SNA299683R0100 | 52 |
| D4/6.T3.P | 1SNA299684R0200 | 53 |
| D4/8.D2.P.SF | 1SNA400270R2000 | 82 |
| D4/8.D2.P.SFD | 1SNA400272R1600 | 83 |

| Type | Order code | Page |
|---|---|---|
| D4/8.D2.P.SFL | 1SNA400271R1500 | 83 |
| D6/8.P | 1SNA165830R2100 | 35 |
| D70/22 | 1SNA400305R1000 | 24 |
| D70/22.N | 1SNA400306R1100 | 24 |
| D70/22.P | 1SNA400772R1300 | 24 |
| D70/22.YL | 1SNA400789R0000 | 24 |
| D70/32.AF | 1SNA190007R2600 | 97 |
| D70/32.FF | 1SNA190002R2100 | 92 |
| D95/26 | 1SNA400370R2400 | 25 |
| D95/26.N | 1SNA400371R1100 | 25 |
| D95/26.P | 1SNA400620R1700 | 25 |
| D95/26.YL | 1SNA400791R0000 | 25 |
| DRF10 | 1SNA205769R2000 | 93 |
| DRF12 | 1SNA205770R2500 | 94 |
| DRF16 | 1SNA205771R1200 | 95 |
| DRF6 | 1SNA205767R1600 | 91 |
| DRF8 | 1SNA205768R2700 | 92 |
| EIP | 1SNA113550R2400 | 12 |
| EL6 | 1SNA173627R2100 | 12 |
| EL61 | 1SNA177812R1700 | 50 |
| EV6I | 1SNA206394R0200 | 67 |
| EV8S | 1SNA168401R0300 | 69 |
| EXBN2 | 1SNA171018R2000 | 62 |
| FC2 | 1SNA007865R2600 | 13 |
| FC4 | 1SNA167860R0100 | 15 |
| FC4-1 | 1SNA167927R1000 | 65 |
| FED3E | 1SNA116771R2000 | 50 |
| FEM12 | 1SNA118618R0100 | 22 |
| FEM13U | 1SNA199635R2400 | 84 |
| FEM3A | 1SNA116576R1500 | 16 |
| FEM4A | 1SNA116629R2200 | 17 |
| FEM6 | 1SNA118368R1600 | 12 |
| FEM62 | 1SNA114994R0700 | 58 |
| FEM6D | 1SNA118499R2300 | 42 |
| FEM8 | 1SNA113373R2600 | 60 |
| FEM8D1 | 1SNA116656R2500 | 48 |
| FEM8D2S | 1SNA116913R0700 | 80 |
| FEM8D2S1 | 1SNA400273R1700 | 82 |
| FEM8S | 1SNA116951R1500 | 74 |
| FEMS6D | 1SNA116591R0500 | 61 |
| FEMSTA | 1SNA116979R2100 | 68 |
| FEMT1 | 1SNA113137R0200 | 65 |
| FEMT2 | 1SNA113629R2700 | 69 |
| FEMT4 | 1SNA114778R0500 | 68 |
| FU520 | 1SNA008288R1500 | 74 |
| | 1SNA008289R1600 | 74 |
| | 1SNA008290R1300 | 74 |
| | 1SNA008291R0000 | 74 |
| | 1SNA008292R0100 | 74 |
| FU633 | 1SNA168556R0500 | 84 |
| | 1SNA168558R1700 | 84 |
| | 1SNA168560R1500 | 84 |
| ITV5 | 1SNA176259R1300 | 42 |
| JB16-10 | 1SNK916310R0000 | 23 |
| JB16-2 | 1SNK916302R0000 | 23 |
| JB16-3 | 1SNK916303R0000 | 23 |
| JB16-4 | 1SNK916304R0000 | 23 |
| JB16-5 | 1SNK916305R0000 | 23 |
| JB22-10 | 1SNK922310R0000 | 24 |
| JB22-2 | 1SNK922302R0000 | 24 |
| JB22-3 | 1SNK922303R0000 | 24 |
| JB22-5 | 1SNK922305R0000 | 24 |
| JB26-10 | 1SNK926310R0000 | 25 |
| JB26-2 | 1SNK926302R0000 | 25 |
| JB26-3 | 1SNK926303R0000 | 25 |
| JB26-5 | 1SNK926305R0000 | 25 |
| M10/10 | 1SNA105120R2600 | 20 |
| | 1SNA115120R1700 | 20 |
| | 1SNA195120R1000 | 20 |

# Index
## Type classification


| Type | Order code | Page |
|---|---|---|
| | 1SNA400188R0300 | 20 |
| | 1SNA400189R0400 | 20 |
| | 1SNA400190R0100 | 20 |
| M10/10.1 | 1SNA115261R2000 | 21 |
| M10/10.N | 1SNA125120R1100 | 20 |
| M10/10.P | 1SNA165115R1000 | 20 |
| M16/12 | 1SNA105129R2300 | 22 |
| | 1SNA115129R1400 | 22 |
| | 1SNA195129R1500 | 22 |
| | 1SNA400191R2600 | 22 |
| | 1SNA400192R2700 | 22 |
| | 1SNA400193R2000 | 22 |
| M16/12.N | 1SNA125129R1600 | 22 |
| M16/12.P | 1SNA165130R2300 | 22 |
| M35/16 | 1SNA105124R1600 | 23 |
| | 1SNA115124R0700 | 23 |
| | 1SNA195124R0000 | 23 |
| | 1SNA400194R2100 | 23 |
| | 1SNA400195R2200 | 23 |
| | 1SNA400196R2300 | 23 |
| M35/16.N | 1SNA125124R0100 | 23 |
| M35/16.P | 1SNA165111R1400 | 23 |
| M4/6 | 1SNA105001R2700 | 14 |
| | 1SNA105002R2000 | 14 |
| | 1SNA105031R1400 | 14 |
| | 1SNA105032R1500 | 14 |
| | 1SNA105051R2000 | 14 |
| | 1SNA105116R1600 | 14 |
| | 1SNA105209R1400 | 14 |
| | 1SNA115116R0700 | 14 |
| | 1SNA195116R0000 | 14 |
| | 1SNA206404R0500 | 14 |
| M4/6.1 | 1SNA105208R1300 | 15 |
| | 1SNA115259R0600 | 15 |
| M4/6.2 | 1SNA115217R1400 | 15 |
| M4/6.3A | 1SNA115468R2000 | 16 |
| M4/6.3A.N | 1SNA125468R2200 | 16 |
| M4/6.3A.P | 1SNA195637R1200 | 16 |
| M4/6.4 | 1SNA115192R0400 | 15 |
| | 1SNA195192R0500 | 15 |
| M4/6.4A | 1SNA115479R2300 | 17 |
| M4/6.4A.N | 1SNA125479R2500 | 17 |
| M4/6.4A.P | 1SNA195638R2300 | 17 |
| M4/6.D1 | 1SNA115166R1100 | 47 |
| M4/6.D1.1 | 1SNA115204R2000 | 46 |
| M4/6.D1.1N | 1SNA125204R2200 | 46 |
| M4/6.D1.N | 1SNA125166R1300 | 47 |
| M4/6.D2 | 1SNA105044R2100 | 44 |
| | 1SNA105045R2200 | 44 |
| | 1SNA105046R2300 | 44 |
| | 1SNA105047R2400 | 44 |
| | 1SNA105048R0500 | 44 |
| | 1SNA105049R0600 | 44 |
| | 1SNA115271R2200 | 44 |
| | 1SNA195271R2300 | 44 |
| M4/6.D2.1 | 1SNA115126R0100 | 45 |
| M4/6.D2.1.N | 1SNA125126R0300 | 45 |
| M4/6.D2.2 | 1SNA115322R1500 | 45 |
| M4/6.D2.N | 1SNA125271R2400 | 44 |
| M4/6.D2.SBT | 1SNA115702R2300 | 64 |
| M4/6.D2.SNBT | 1SNA115561R1500 | 61 |
| M4/6.N | 1SNA125116R0100 | 14 |
| M4/6.P | 1SNA165113R1600 | 14 |
| M4/6.SB | 1SNA115435R0700 | 62 |
| M4/6.SNB | 1SNA105053R2200 | 58 |
| | 1SNA115686R1300 | 58 |
| | 1SNA115986R0000 | 58 |
| | 1SNA195686R1400 | 58 |
| M4/6.SNBT | 1SNA115438R1200 | 59 |
| | 1SNA115495R0400 | 59 |
| | 1SNA115987R0100 | 59 |
| | 1SNA195438R1300 | 59 |
| | 1SNA206538R0200 | 59 |
| M4/8 | 1SNA115523R0700 | 74 |
| M4/8.D2.SF | 1SNA115604R2100 | 80 |
| M4/8.D2.SFD | 1SNA115647R2300 | 81 |
| M4/8.D2.SFD3 | 1SNA115936R0500 | 81 |
| M4/8.D2.SFL | 1SNA115646R2200 | 81 |
| M4/8.SF | 1SNA115657R2500 | 74 |
| M4/8.SF2 | 1SNA105135R1100 | 75 |
| M4/8.SFD | 1SNA115663R2300 | 77 |
| M4/8.SFD3 | 1SNA115935R0400 | 76 |
| M4/8.SFDT | 1SNA115665R2500 | 77 |
| M4/8.SFL | 1SNA115661R2100 | 77 |
| M4/8.SFLT | 1SNA115667R2700 | 77 |
| M4/8.SFT | 1SNA115662R2200 | 75 |
| M4/8.SN | 1SNA115659R0700 | 78 |
| M4/8.SNT | 1SNA115668R0000 | 78 |
| M6/8 | 1SNA105004R2200 | 18 |
| | 1SNA105118R2000 | 18 |
| | 1SNA115118R1100 | 18 |
| | 1SNA195118R1200 | 18 |
| | 1SNA400186R2100 | 18 |
| | 1SNA400187R2200 | 18 |
| | 1SNA400239R1500 | 18 |
| M6/8.1 | 1SNA105128R2200 | 19 |
| | 1SNA115260R0300 | 19 |
| | 1SNA195260R0400 | 19 |
| M6/8.1.N | 1SNA125260R0500 | 19 |
| M6/8.2 | 1SNA115218R2500 | 19 |
| M6/8.4 | 1SNA115219R2600 | 19 |
| M6/8.D1 | 1SNA115498R1700 | 49 |
| M6/8.D2 | 1SNA115501R1200 | 48 |
| | 1SNA195501R1300 | 48 |
| M6/8.D2.1 | 1SNA115497R0600 | 49 |
| M6/8.N | 1SNA125118R1300 | 18 |
| M6/8.P | 1SNA165114R1700 | 18 |
| M6/8.SB | 1SNA115436R0000 | 63 |
| M6/8.SNB | 1SNA105055R2400 | 60 |
| | 1SNA115688R2500 | 60 |
| M6/8.ST | 1SNA115236R1700 | 69 |
| M6/8.ST1 | 1SNA115237R1000 | 70 |
| M6/8.ST1.IP20 | 1SNA115971R1000 | 72 |
| M6/8.ST3 | 1SNA115239R2200 | 71 |
| M6/8.ST7 | 1SNA115243R2600 | 69 |
| M6/8.STA | 1SNA115359R0200 | 68 |
| M6/8.STP | 1SNA105141R2700 | 66 |
| | 1SNA105142R2000 | 66 |
| | 1SNA115277R2000 | 66 |
| M6/8.STP1 | 1SNA115529R1500 | 65 |
| M6/8.STP3 | 1SNA115500R2500 | 65 |
| MA2.5/5 | 1SNA105052R2100 | 12 |
| | 1SNA105075R2000 | 12 |
| | 1SNA105077R2200 | 12 |
| | 1SNA105486R1200 | 12 |
| | 1SNA115486R0300 | 12 |
| | 1SNA195486R0400 | 12 |
| | 1SNA400184R2700 | 12 |
| MA2.5/5.1 | 1SNA115485R0200 | 13 |
| | 1SNA125485R0400 | 13 |
| MA2.5/5.D1.1 | 1SNA115530R1200 | 43 |
| MA2.5/5.D2 | 1SNA115490R1300 | 42 |
| | 1SNA195490R1400 | 42 |
| MA2.5/5.D2.1 | 1SNA115491R0000 | 43 |
| MA2.5/5.D2.N | 1SNA125490R1500 | 42 |
| MA2.5/5.N | 1SNA125486R0500 | 12 |
| MA2.5/5.P | 1SNA165488R2700 | 12 |
| MA2.5/5.SNB | 1SNA115699R2000 | 56 |
| MA2.5/5.SNBT | 1SNA115700R0500 | 57 |
| | 1SNA115701R2200 | 57 |
| MA2.5/5.SNBTA | 1SNA115505R1600 | 57 |
| | 1SNA125505R1000 | 57 |
| ML10/13.SF | 1SNA199095R1300 | 84 |
| ML10/13.SFD | 1SNA199166R2600 | 85 |
| ML10/13.SFL | 1SNA199168R0000 | 85 |
| ML10/13.SN | 1SNA199105R2200 | 84 |
| PC10-10 | 1SNA163315R2600 | 20 |
| PC13-10 | 1SNA173510R2000 | 84 |
| PC5-10 | 1SNA113544R1200 | 12 |
| PC5-2 | 1SNA113542R1000 | 12 |
| PC6-10 | 1SNA113548R2600 | 14 |
| PC61-10 | 1SNA163311R2200 | 44 |
| PC6-2 | 1SNA113546R1400 | 14 |
| PC8-10 | 1SNA163313R2400 | 18 |
| PC81-10 | 1SNA173523R1100 | 74 |
| PC8-2 | 1SNA116538R1700 | 18 |
| PC8-3 | 1SNA116539R1000 | 60 |
| PC8-4 | 1SNA116540R2500 | 60 |
| PC8-R1 | 1SNA400711R0600 | 69 |
| PC8-R2 | 1SNA400712R0700 | 69 |
| PC8-R3 | 1SNA400713R0000 | 69 |
| PC8-R4 | 1SNA400724R0300 | 69 |
| RC1010 | 1SNA238000R1600 | 20 |
| RC510 | 1SNA231000R0700 | 12 |
| RC610 | 1SNA233000R0100 | 14 |
| RC65 | 1SNA232000R0000 | 50 |
| RC810 | 1SNA234000R0200 | 18 |
| SCD | 1SNA103189R2600 | 52 |
| SCF12 | 1SNA113102R1000 | 22 |
| SCF6 | 1SNA118707R0300 | 12 |
| SCF6D | 1SNA118495R1700 | 44 |
| SCFCV1-2 | 1SNA116795R1100 | 12 |
| SCFCV4 | 1SNA116797R1300 | 24 |
| SCFM6 | 1SNA114825R0500 | 12 |
| SCFT1 | 1SNA103588R2600 | 65 |
| SCFT2 | 1SNA114522R0500 | 69 |
| SC-JB8-2 | 1SNK900652R0000 | 69 |
| SC-JB8-3 | 1SNK900653R0000 | 69 |
| SC-JB8-4 | 1SNK900654R0000 | 69 |
| SCM6 | 1SNA113003R1000 | 14 |
| SCM6D | 1SNA113482R0500 | 44 |
| SCMA5 | 1SNA116728R2500 | 12 |
| SCMA5D | 1SNA116720R2100 | 42 |
| TGA13 | 1SNA168564R0500 | 84 |
| | 1SNA168565R0600 | 84 |
| | 1SNA168566R0700 | 84 |
| TGA8 | 1SNA168672R1100 | 74 |
| | 1SNA168673R1200 | 74 |
| | 1SNA168674R1300 | 74 |

# Notes

## LET'S CONNECT

We make it easy to connect with our experts and are ready to provide all the support you need. For additional information or product assistance, please contact your field representative or our customer service department. Additional information is also available on the website http://www.te.com/entrelec.

## TECHNICAL SUPPORT

**te.com/support-center**

**Asia:**
+86 400-820-6015

**Europe, Middle East, & Africa:**
+49 6251-133-0

**North America:**
+1-888-441-9982

**te.com**

ENTRELEC, TE Connectivity, TE Connectivity (logo) and Every Connection Counts are trademarks. All other logos, products and/or company names referred to herein might be trademarks of their respective owners.

All other logos, products and/or company names referred to herein might be trademarks of their respective owners.

The information given herein, including drawings, illustrations and schematics which are intended for illustration purposes only, is believed to be reliable. However, TE Connectivity makes no warranties as to its accuracy or completeness and disclaims any liability in connection with its use. TE Connectivity's obligations shall only be as set forth in TE Connectivity's Standard Terms and Conditions of Sale for this product and in no case will TE Connectivity be liable for any incidental, indirect or consequential damages arising out of the sale, resale, use or misuse of the product. Users of TE Connectivity products should make their own evaluation to determine the suitability of each such product for the specific application.

© 2019 TE Connectivity Ltd. family of companies All Rights Reserved.

**1-1773971-1 04/19 - Printed in France (Qt - Imprimeur)**

**TE Connectivity**

3, rue Jean Perrin
69687 Chassieu cedex
France

Tel:

Fax:

**www.te.com/entrelec**