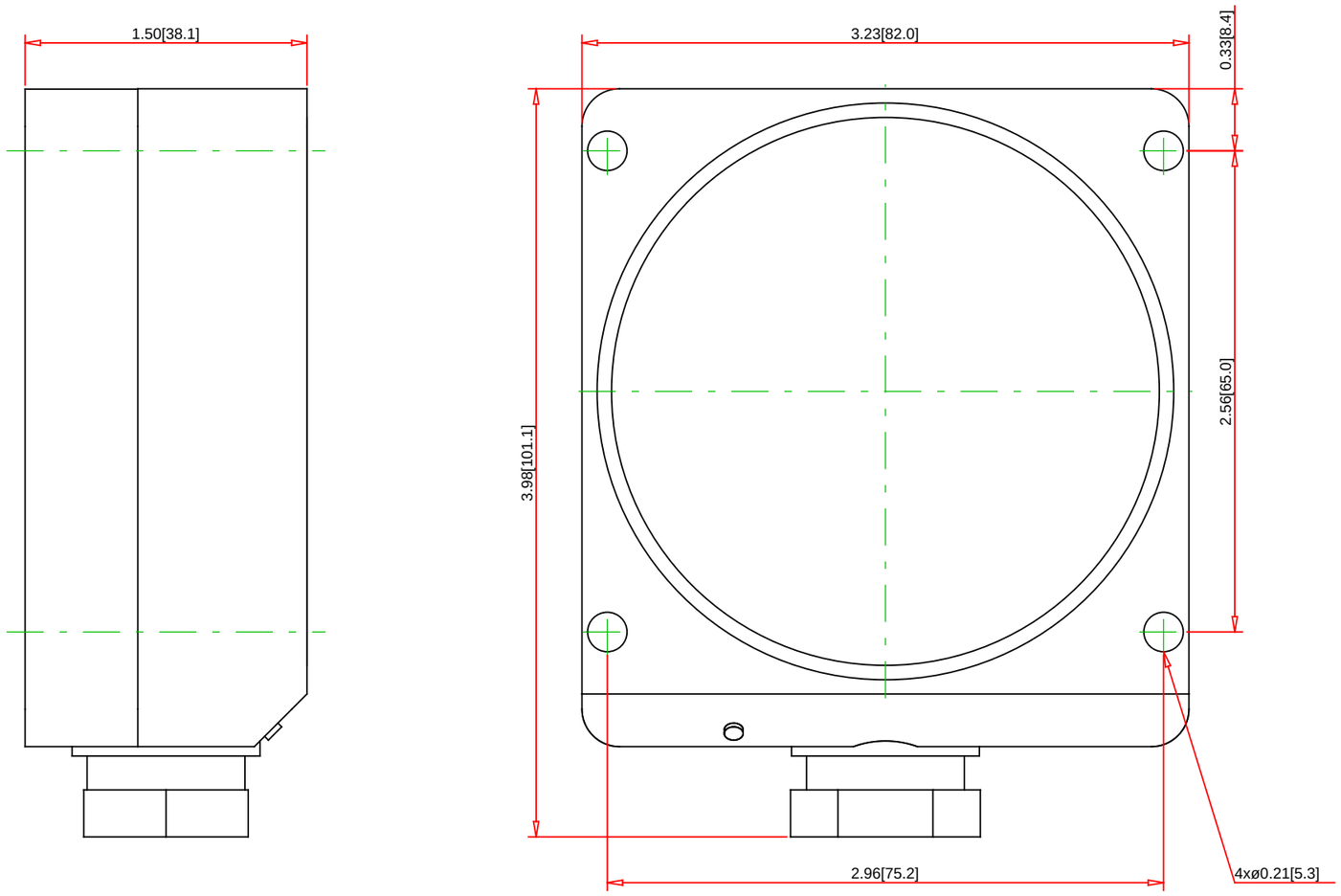

Note:
- Drawings Not To Scale
- Drawings Subject to Change Without Notice
- Dimensions are inches next to [Millimeters]

Part No.:

XSDC407138

Telemecanique Sensors

Telemecanique Sensors
1875 Founders Drive
Dayton, OH 45420-4017
Customer Care Center : 1-800-435-2121
Web : www.tesensors.com

Technical Information:

Detecting Distance:	30.0 - 60.0 mm (1.17 - 2.34 in)
Circuit Type:	2 wire
Output Mode:	NO/NC
Volts Type:	DC
Voltage Range:	12-48 VDC
Max Load:	100 mA
Shielding:	Non shielded
Max Switching Frequency:	180 Hz
Temp Range:	-25° to 70° C (-13° to 158° F)
NEMA Type:	4X (indoor use only)
IP Rating:	IP67
Standards:	UL, CE Rohs

Specification:

Sensor Type:	Inductive
Description:	Proximity Sensor, Inductive, Flat Profile, 12-48 VDC, Non shielded
Body Style:	Flat Profile
Diameter:	
Housing Material:	Thermoplastic Polyester
Cable Size:	2.0 m (6.6 ft)
Connector Type:	
Special Features:	