Data Sheet | Item Number: 753-647

DALI Multi-Master

https://www.wago.com/753-647

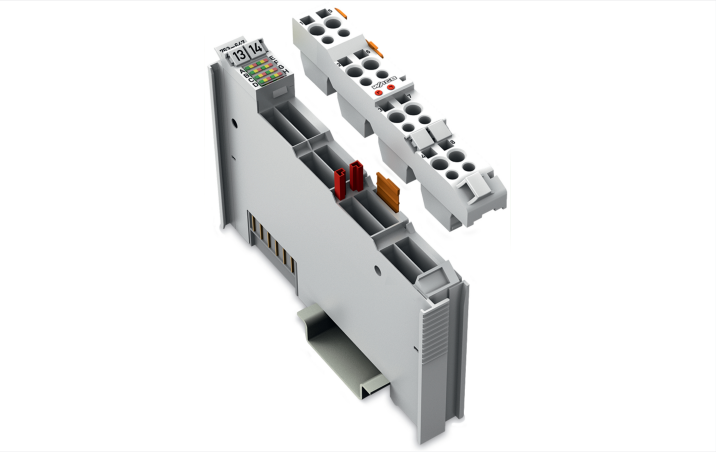

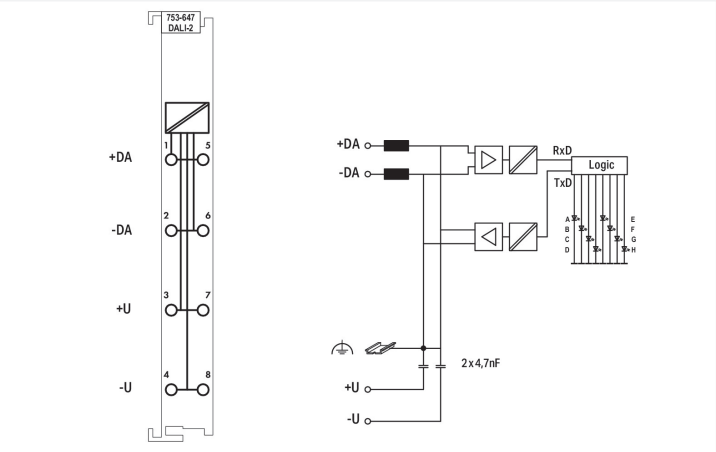

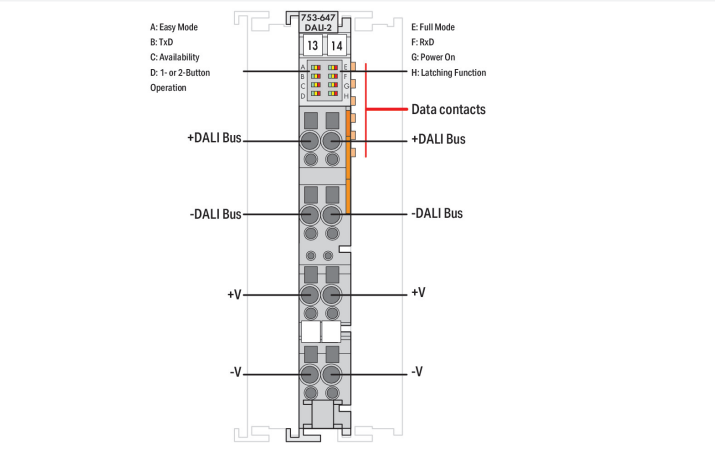

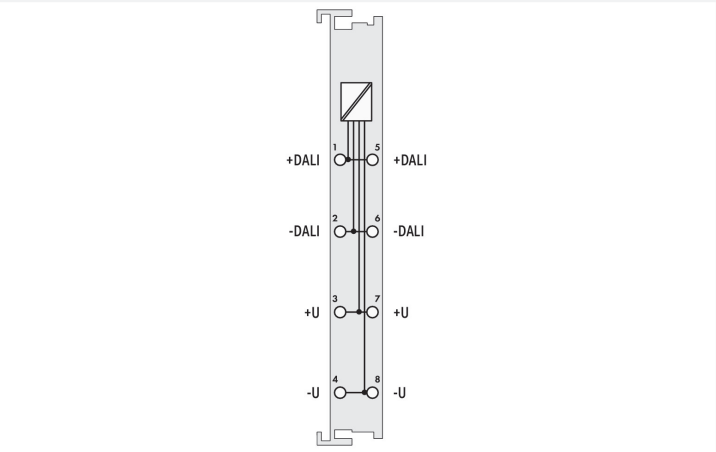

The DALI Multi-Master (753-647) is certified according to the IEC 62386 DALI-2 standard. This manufacturer-independent protocol ensures the interoperability of DALI devices in lighting applications.
Just 12 mm wide, this module is used as a DALI interface in combination with WAGO's 750 Series Controllers and Modules (e.g., BACnet, KNX, EnOcean, LON®, Modbus®).
Each DALI Multi-Master supports 64 addresses for electronic control gears (ECGs) and 64 addresses for control devices (DALI multi sensors: Connection of max. 16 sensors recommended due to the cyclic transmission characteristics). Each DALI ECG can be assigned to 16 groups and 16 scenes. The DALI Multi-Master also offers 16 additional virtual groups on the DALI bus. Using the WAGO I/O System 750, DALI controllers can be seamlessly integrated into other building systems. Several DALI masters can connect to a single fieldbus node. The maximum number of modules that may be connected to a controller depends on the memory required by the application. The WAGO-I/O-PRO (CODESYS V2.3) or ***e!**COCKPIT* (based on CODESYS V3) programming software is used as the pro-

 Continued on next page

gramming software for the fieldbus nodes. WAGO provides a comprehensive IEC-61131-3 library of function blocks, simplifying the creation of complex lighting applications.
Alternatively, an “Easy Mode” allows lighting functions to be readily controlled without any complicated PLC programming. The comprehensive and easy-to-use-WAGO DALI Configurator is available for commissioning and maintenance – it can either run as a stand-alone application or be called from the WAGO-I/O-CHECK (CODESYS V2.3) or ***e!****COCKPIT* Software (based on CODESYS V3).
Two options are available to power to the DALI Multi-Master:
1. Via 753-620 DALI Multi-Master DC/DC Converter for powering a single module.
2. Via 787-2857 Power Supply for powering several 753-647 DALI Multi-Master Modules.

Notes

Note	The 753 Series Plug is included with delivery.

Technical data

Device specification	DALI-2 Specification: DIN IEC 62386 only in conjunction with 753-620 or 787-2857 Power Supplies
Device-specific	Current consumption from DALI bus with alternative supply via DALI bus: 10 mA
Topology	Number of control gears/control devices (DALI): 64 control gears + 64 control devices (addressable)
Transmission channel	1
Data width	24-byte data
Guaranteed supply current	200 mA
Supply current (max.)	250 mA
Supply voltage	DALI: 18 V (external)
Commissioning	Commissioning and programming: via WAGO-I/O-PRO V2.3 or CODESYS 3.5; Configuration: with WAGO DALI Configurator
Supply voltage (system)	5 VDC; via data contacts
Current consumption (system supply)	85 mA
Supply voltage (field)	
Isolation	2100 VDC DALI bus/local bus
Indicators	LED (A-H) green/yellow/red: Easy Mode, TxD, ready for operation, 1 or 2 button operation, Full Mode, RxD, voltage present, latching function

Connection Data

Connection technology: I/O	8 x CAGE CLAMP®
Connectable conductor materials	Copper
Connection type	Inputs/outputs
Solid conductor	0.08 … 2.5 mm² / 28 … 14 AWG
Fine-stranded conductor	0.08 … 2.5 mm² / 28 … 14 AWG
Strip length	9 … 10 mm / 0.35 … 0.39 inches

Physical data

Width	12 mm / 0.472 inches
Height	100 mm / 3.937 inches
Depth	69 mm / 2.717 inches
Depth from upper-edge of DIN-rail	61.8 mm / 2.433 inches

 Continued on next page

Mechanical data

Mounting type	DIN-35 rail
Pluggable connector	pluggable

Material data

Housing material	Polycarbonate; polyamide 6.6
Fire load	0.934 MJ
Weight	61.4 g
Conformity marking	CE

Environmental requirements

Ambient temperature (operation)	0 … +55 °C
Ambient temperature (storage)	-40 … +85 °C
Protection type	IP20
Pollution degree	2 per IEC 61131-2
Operating altitude	0 … 2000 m / 0 … 6562 ft
Mounting position	Horizontal left, horizontal right, horizontal top, horizontal bottom, vertical top and vertical bottom
Relative humidity (without condensation)	95 %
Vibration resistance	4g per IEC 60068-2-6
Shock resistance	15g per IEC 60068-2-27
EMC immunity to interference	per EN 61000-6-2*, *only in connection with 753-620 DC/DC Converter or 787-1007 Power Supply
EMC emission of interference	per EN 61000-6-3*, *only in connection with 753-620 DC/DC Converter or 787-1007 Power Supply
Exposure to pollutants	per IEC 60068-2-42 and IEC 60068-2-43
Permissible H_2S contaminant concentration at a relative humidity 75 %	10 ppm
Permissible SO_2 contaminant concentration at a relative humidity 75 %	25 ppm

Commercial data

Product Group	15 (I/O System)
PU (SPU)	1 pcs
Packaging type	Box
Country of origin	DE
GTIN	4050821475712
Customs tariff number	85389099990

Product Classification

UNSPSC	39121521
eCl@ss 10.0	27-24-26-08
eCl@ss 9.0	27-24-26-08
ETIM 9.0	EC001604
ETIM 10.0	EC001604
ECCN	NO US CLASSIFICATION

 Continued on next page

Environmental Product Compliance

CAS-No.	1303-86-2 1317-36-8 7439-92-1 79-94-7
REACH Candidate List Substance	2,2',6,6'-tetrabromo-4,4'-isopropylidenediphenol Diboron trioxide Lead Lead monoxide
RoHS Compliance Status	Compliant,With Exemption
RoHS Exemption	6(c) 7(a) 7(c)-I 7(c)-II
SCIP notification number (Austria)	213eb1c4-9ed7-4749-b22e-256a7bf968fb
SCIP notification number (Belgium)	2f382da1-a23d-4244-9e14-87624fb0f1fd
SCIP notification number (Bulgaria)	7c0c02d7-7667-43cd-9d52-56d5d772cb75
SCIP notification number (Czech Republic)	90479752-9e92-42b2-8a34-27a9419c6e5d
SCIP notification number (Denmark)	c78efd5c-36c2-4820-9e12-4c016b42179e
SCIP notification number (Finland)	bcdfe591-236b-46a9-ae06-835b9f6d9f8b
SCIP notification number (France)	c2299956-d5e5-49c7-8fff-96cdc1449b96
SCIP notification number (Germany)	2683dc8b-cc59-4163-a3cc-b2785f3aba7b
SCIP notification number (Hungary)	9cb78b3b-5d4c-4307-bcc1-559590473e9d
SCIP notification number (Italy)	0f8e04a5-59fe-4bd8-81a9-b5148e7a1726
SCIP notification number (Netherlands)	0be66433-cffe-4108-a84a-068c2f0da78e
SCIP notification number (Poland)	9fe97acd-0526-41e2-b85a-639c510dd358
SCIP notification number (Romania)	1e697fdd-545c-4b9b-b780-65bea0c2984d
SCIP notification number (Sweden)	0e952436-3ef8-4845-b68d-5663affeb2cc

Approvals / Certificates

General approvals

Approval	Standard	Certificate Name
EAC GZO Almaty Standart	TP TC 020/2011	EAC CoC 03083
KC National Radio Research Agency	Article 58-2, Clause 3	MSIP-REM-W43-MSM750
UL Underwriters Laboratories Inc. (ORDINARY LOCATIONS)	UL 508	E175199

Declarations of conformity and manufacturer's declarations

Approval	Standard	Certificate Name
EU-Declaration of Conformity WAGO GmbH & Co. KG	-	-
EU-Declaration of Conformity WAGO GmbH & Co. KG	-	-
UK-Declaration of Conformity WAGO GmbH & Co. KG	-	-
UK-Declaration of Conformity WAGO GmbH & Co. KG	-	-

Approvals for marine applications

Approval	Standard	Certificate Name
ABS American Bureau of Shipping	-	25-0415412
BSH Bundesamt fuer Seeschiffahrt und Hydrographie	-	1104

Approvals for marine applications

DNV DNV GL SE	DNV-CG-0339,Aug.2021	TAA0000194
KR Korean Register of Shipping	-	KR HMB05880-AC001
LR Lloyds Register EMEA	-	LR22180952TA
PRS Polski Rejestr Statków	-	TE/1101/880590/23
RINA RINA Germany GmbH	-	ELE343521XG001

 Continued on next page

Protocol and fieldbus specific certificates

Approval	Standard	Certificate Name
DALI2 Digital Illumination Interface Alliance (DiiA)	-	DALI_2_ID2036

Downloads

Environmental Product Compliance

Compliance Search

Environmental Product Compliance 753-647	

Documentation

Manual

Product Manual WAGO DALI Configurator	V 4.1.0 24.06.2024	pdf 5467.88 KB	
System Manual Series 750/753			
Product Manual DALI Multi-Master Module	V 1.4.5 29.11.2022	pdf 2635.00 KB	

Compatibility Information

Compatibility List DALI Sensors	V 1.2.4 19.02.2025	pdf 516.91 KB	

System Description

750/753 Series I/O-System – General Product Information	pdf 953.35 KB	
Overview on WAGO-I/O-SYSTEM 750 approvals	pdf 770.48 KB	

Bid Text

753-647	14.05.2019	x81 7.10 KB	
753-647	14.05.2019	docx 38.51 KB	
ausschreiben.de 753-647			

Application Notes

Application Note CoDeSys 2.3

Application Note ThebenKNX_DALI	25.08.2016 25.08.2016	zip 727.76 KB	
Application note: DALI 753-647 Configuration Interface	1.0.2 29.04.2019	zip 3032.71 KB	

Application Note e!COCKPIT

e!COCKPIT application note WagoAppDALI	2021-11-08 08.11.2021	pdf 2216.90 KB	

 Continued on next page

CAD/CAE-Data

CAD data
2D/3D Models 753-647

CAE data
EPLAN Data Portal 753-647
WSCAD Universe 753-647
ZUKEN Portal 753-647

Engineering-Software

Configuration and Commissioning Software			
WAGO DALI Configurator Setup (753-647)	3.77.00.00 31.05.2021	zip 23931.51 KB	

Runtime Software

Firmware			
0753-0647 HW02, DALI-Multi-Master	V 08 07.06.2022	zip 451.55 KB	
0753-0647 HW03 DALI 2, DALI-Multi-Master	V 26 03.07.2025	zip 195.06 KB	

Libraries

e!COCKPIT libraries			
e!COCKPIT Library Description WagoAppDALI	1.3.0.36 30.06.2022	pdf 2162.70 KB	

Library			
Libraries for Building Automation CODESYS 2.3	2025-01-30 30.01.2025	zip 71441.83 KB	

1 Compatible Products

1.1 Optional Accessories

1.1.1 DIN-rail

1.1.1.1 Mounting accessories

Item No.: 210-196
Aluminum carrier rail; 35 x 8.2 mm; 1.6 mm thick; 2 m long; unslotted; similar to EN 60715; silver-colored

Item No.: 210-198
Copper carrier rail; 35 x 15 mm; 2.3 mm thick; 2 m long; unslotted; according to EN 60715; copper-colored

Item No.: 210-197
Steel carrier rail; 35 x 15 mm; 1.5 mm thick; 2 m long; slotted; similar to EN 60715; silver-colored

Item No.: 210-114
Steel carrier rail; 35 x 15 mm; 1.5 mm thick; 2 m long; unslotted; similar to EN 60715; silver-colored

Item No.: 210-118
Steel carrier rail; 35 x 15 mm; 2.3 mm thick; 2 m long; unslotted; according to EN 60715; silver-colored

Item No.: 210-112
Steel carrier rail; 35 x 7.5 mm; 1 mm thick; 2 m long; slotted; according to EN 60715; "Hole width 25 mm; silver-colored

Item No.: 210-113
Steel carrier rail; 35 x 7.5 mm; 1 mm thick; 2 m long; unslotted; according to EN 60715; silver-colored

 Continued on next page

1.1.2 Marking

1.1.2.1 Group marker carrier

Item No.: 750-107
Group marker carrier

1.1.2.2 Marker

Item No.: 2009-145/000-006
Mini-WSB Inline; for Smart Printer; 1700 pieces on roll; stretchable 5 - 5.2 mm; plain; snap-on type; blue

Item No.: 2009-145/000-007
Mini-WSB Inline; for Smart Printer; 1700 pieces on roll; stretchable 5 - 5.2 mm; plain; snap-on type; gray

Item No.: 2009-145/000-023
Mini-WSB Inline; for Smart Printer; 1700 pieces on roll; stretchable 5 - 5.2 mm; plain; snap-on type; green

Item No.: 2009-145/000-012
Mini-WSB Inline; for Smart Printer; 1700 pieces on roll; stretchable 5 - 5.2 mm; plain; snap-on type; orange

Item No.: 2009-145/000-005
Mini-WSB Inline; for Smart Printer; 1700 pieces on roll; stretchable 5 - 5.2 mm; plain; snap-on type; red

Item No.: 2009-145/000-024
Mini-WSB Inline; for Smart Printer; 1700 pieces on roll; stretchable 5 - 5.2 mm; plain; snap-on type; violet

Item No.: 2009-145
Mini-WSB Inline; for Smart Printer; 1700 pieces on roll; stretchable 5 - 5.2 mm; plain; snap-on type; white

Item No.: 2009-145/000-002
Mini-WSB Inline; for Smart Printer; 1700 pieces on roll; stretchable 5 - 5.2 mm; plain; snap-on type; yellow

Item No.: 248-501/000-006
Mini-WSB marking card; as card; not stretchable; plain; snap-on type; blue

Item No.: 248-501/000-007
Mini-WSB marking card; as card; not stretchable; plain; snap-on type; gray

Item No.: 248-501/000-023
Mini-WSB marking card; as card; not stretchable; plain; snap-on type; green

Item No.: 248-501/000-017
Mini-WSB marking card; as card; not stretchable; plain; snap-on type; light green

Item No.: 248-501/000-012
Mini-WSB marking card; as card; not stretchable; plain; snap-on type; orange

Item No.: 248-501/000-005
Mini-WSB marking card; as card; not stretchable; plain; snap-on type; red

Item No.: 248-501/000-024
Mini-WSB marking card; as card; not stretchable; plain; snap-on type; violet

Item No.: 248-501
Mini-WSB marking card; as card; not stretchable; plain; snap-on type; white

Item No.: 248-501/000-002
Mini-WSB marking card; as card; not stretchable; plain; snap-on type; yellow

1.1.2.3 Marker carrier

Item No.: 750-103
Group marker carrier

1.1.3 Power supply

1.1.3.1 Power Supply

Item No.: 787-2857
Power supply; Compact; 1-phase; 18 VDC output voltage; 1.25 A output current; DC-OK LED

 Continued on next page

1.1.3.2 Supply module

Item No.: 753-620
DALI Multi-Master DC/DC Converter

1.1.4 Sensors

1.1.4.1 Sensor

Item No.: 2851-8301
DALI MSensor 02 5DPI 41rc (Ceiling Installation)

Item No.: 2851-8303
DALI MSensor 02 5DPI 41rs (Surface Installation)

Item No.: 2851-8302
DALI MSensor 02 5DPI 41W (Box installation)

Item No.: 2851-8202
DALI sensor coupler

Item No.: 2851-8201
WAGO DALI Multi-Sensor Kit

1.1.5 Shield termination

1.1.5.1 Shield clamping saddles

Item No.: 790-108
Shield clamping saddle; 11 mm wide; diameter of compatible conductor; 3 ... 8 mm

Item No.: 790-208
Shield clamping saddle; 12.4 mm wide; 3 ... 8 mm

Item No.: 790-116
Shield clamping saddle; 19 mm wide; diameter of compatible conductor; 7 ... 16 mm

Item No.: 790-216
Shield clamping saddle; 21.8 mm wide; 6 ... 16 mm

Item No.: 790-124
Shield clamping saddle; 27 mm wide; diameter of compatible conductor; 6 ... 24 mm

Item No.: 790-220
Shield clamping saddle; 30 mm wide; 6 ... 20 mm

Item No.: 790-140
Shield clamping saddle; diameter of compatible conductor

1.1.6 System enclosure

1.1.6.1 System enclosure

Item No.: 850-825
IP65 enclosure; Aluminium (RAL 7032); WxHxD (160x100x160 mm); 9 x M12, 4 x M20

Item No.: 850-826
IP65 enclosure; Aluminium (RAL 7032); WxHxD (240x100x160 mm); 4 x M20, 4 x M16, 14 x M12 cable grip

Item No.: 850-827
IP65 enclosure; Aluminium (RAL 7032); WxHxD (320x100x160 mm); 4 x M20, 8 x M16, 17 x M12 cable grip

Item No.: 850-828
IP65 enclosure; Aluminium (RAL 7032); WxHxD (480x100x160 mm); 4 x M20, 10 x M16, 35 x M12 cable grip

Item No.: 850-826/002-000
IP65 enclosure; Aluminium (RAL 7035); WxHxD (240x100x160 mm); 4 x M20, 4 x M16, 14 x M12 cable grip

Item No.: 850-827/002-000
IP65 enclosure; Aluminium (RAL 7035); WxHxD (320x100x160 mm); 4 x M20, 8 x M16, 17 x M12 cable grip

Item No.: 850-828/002-000
IP65 enclosure; Aluminium (RAL 7035); WxHxD (480x100x160 mm); 4 x M20, 10 x M16, 35 x M12 cable grip

Item No.: 850-834
IP65 enclosure; Polyester (RAL 7032); WxHxD (164x100x164 mm); 9 x M12, 4 x M20

Item No.: 850-835
IP65 enclosure; Polyester (RAL 7032); WxHxD (244x100x164 mm); 4 x M20, 4 x M16, 14 x M12 cable grip

Item No.: 850-836
IP65 enclosure; Polyester (RAL 7032); WxHxD (324x100x164 mm); 4 x M20, 8 x M16, 17 x M12 cable grip

Item No.: 850-814/002-000
IP65 enclosure; Sheet steel (RAL 7035); WxHxD (200x120x200 mm); without flange plate

Item No.: 850-815/002-000
IP65 enclosure; Sheet steel (RAL 7035); WxHxD (300x120x200 mm); without flange plate

Item No.: 850-816/002-000
IP65 enclosure; Sheet steel (RAL 7035); WxHxD (400x120x200 mm); without flange plate

Item No.: 850-817/002-000
IP65 enclosure; Sheet steel (RAL 7035); WxHxD (600x120x200 mm); without flange plate

 Continued on next page