M-10097 | 1

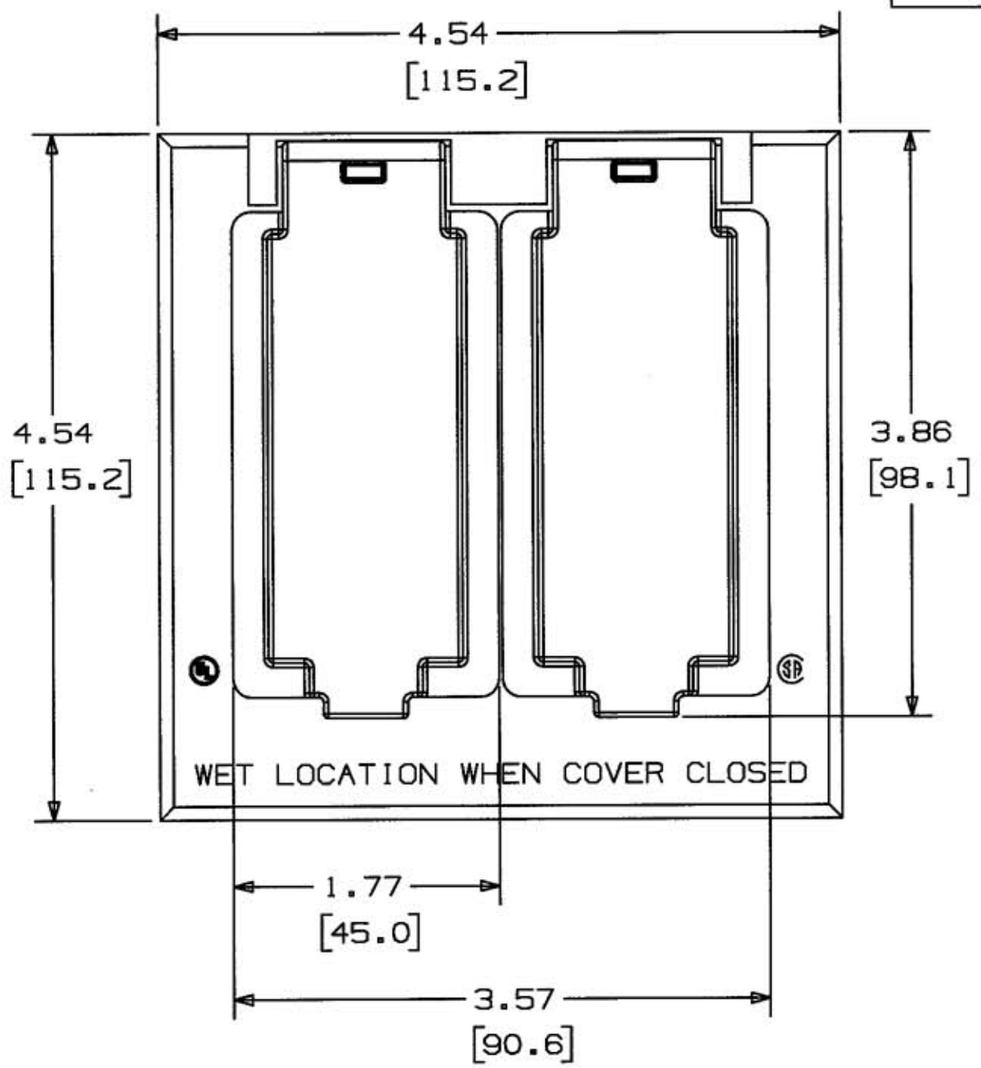

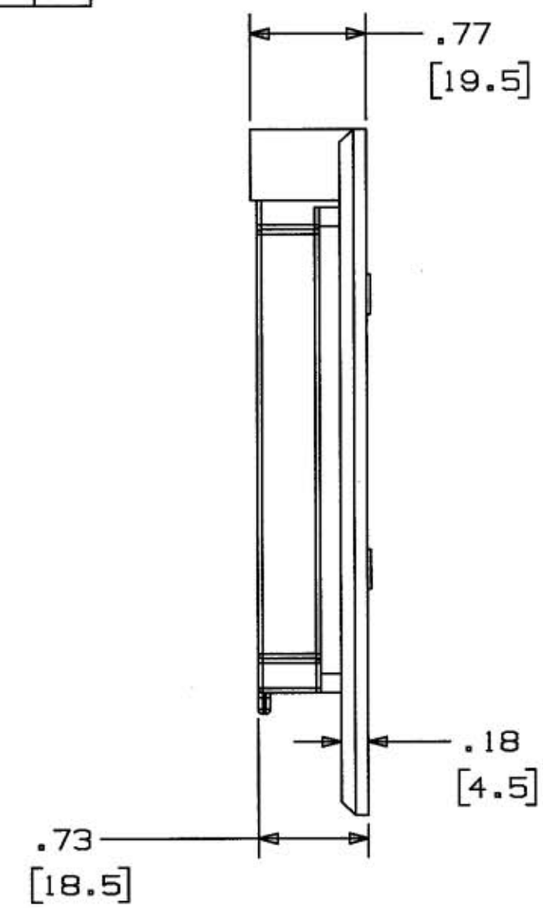

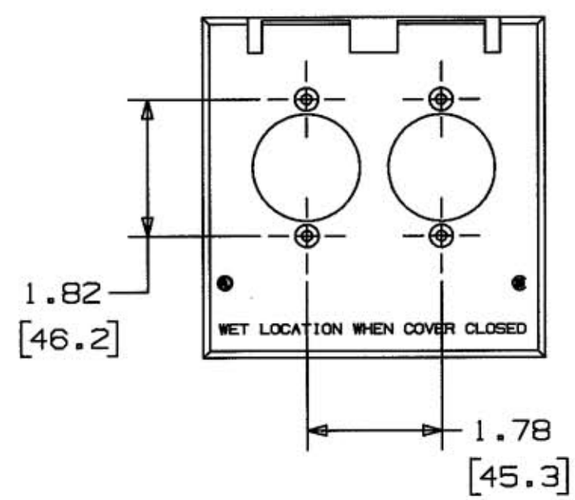

CONFIGURATION

PRODUCT INCLUDES FOLLOWING ITEMS:

1. FOAM GASKET MATERIAL FOR WEATHERPROOF SEAL.
2. COVER MOUNTING SCREW 4 PROVIDED.
3. INSTALLATION INSTRUCTIONS.
4. DIMENSIONS ARE IN INCHES [MM].

LIST OF PARTS

DESCRIPTION	MATERIAL	FINISH
2 GANG COVER	ZINC	PAINT-GRAY
GASKET	FOAM	BLACK
MTG. SCREW	STEEL	PLATE

SYM	REVISIONS	APP	DATE
1	"X" REMOVED; LAST "X" REV. WAS "X-1" PER DCN #13326 AMZ		08/07/06

THE DESIGN AND DIMENSIONS OF THE PRODUCT SHOWN ON THIS DRAWING ARE SUBJECT TO CHANGE WITHOUT NOTICE

TITLE

COVER WEATHER RESISITANT 2-G, 2 SINGLE (HORIZONTAL)

TOLERANCES UNLESS OTHERWISE SPECIFIED
FRACTIONS ±1/64
DECIMALS ±.05
ANGLES ±2°

HUBBELL WIRING SYSTEMS
BRIDGEPORT, CT

DR. BY AMZ	APP. BY
TR. BY	SCALE NONE
CHK'D BY	DATE 04/06/06

DIMENSION SHEET FOR CAT. NO. RW51380

REPAIRABLE ☐ NON-REPAIRABLE ☒

B

M-10097

1

CODE 74545