M-9571 | 2

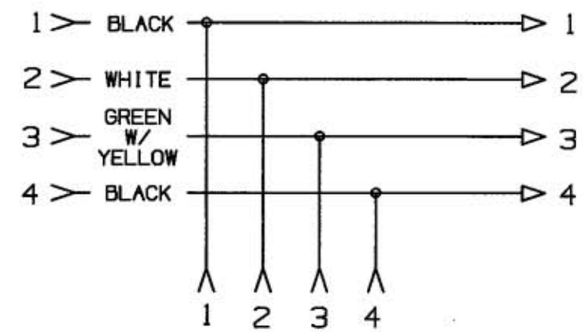

LIST OF PARTS		
DESCRIPTION	MATERIAL	FINISH
COUPLING NUT	BRASS	NICKEL PLATE
INSULATOR SOCKET	NYLON	WHITE
O RING	RUBBER	BLACK
SOCKET CONTACT	COPPER ALLOY	GOLD OVER PD/NI
OVERMOLD	POLYURETHANE	GRAY
PIN CONTACT	BRASS	GOLD OVER PD/NI
INSULATOR PIN	NYLON	WHITE

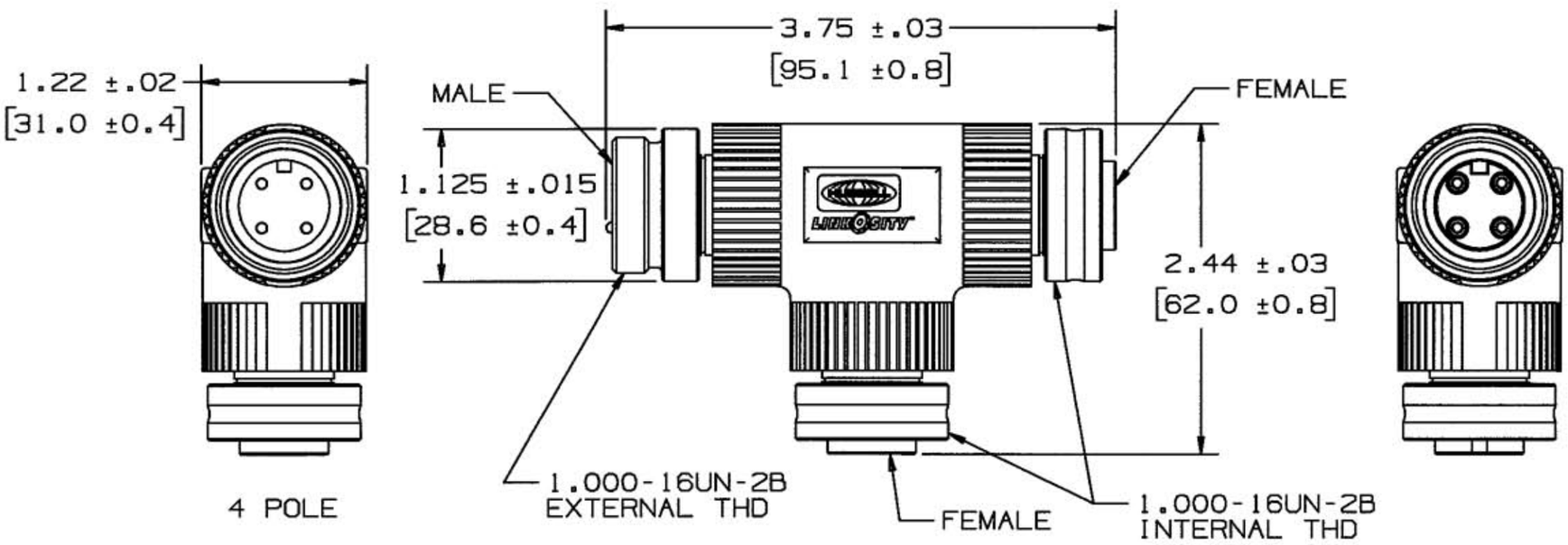

NOTES:

1. ALL DEVICES ARE ENCLOSURE TYPE 4X,13 WHEN MATED 600VAC 30A MAX. PER INDIVIDUAL OUTPUT, 30A TOTAL TEE.
2. UL LISTED. NOT FOR CURRENT INTERRUPT
3. DIMENSIONS ARE IN INCHES [mm].
4. LINKOSITY™ IS A TRADEMARK OF LOCKHEED MARTIN.

CATALOG NO.	# OF POLES
TX3004003004T00	4

SYM	REVISIONS	APP	DATE
2	3/1/05 CAT. NO WAS TX30030023004T00 DCN12247 GPK / CAC	CAC	3/1/05
1	11/03/04 RELEASED PER DCN 12045 CAC	RDK	11/4/04

THE DESIGN AND DIMENSIONS OF THE PRODUCT SHOWN ON THIS DRAWING ARE SUBJECT TO CHANGE WITHOUT NOTICE

TITLE
LINKOSITY™ TEE 30A

TOLERANCES UNLESS OTHERWISE SPECIFIED
FRACTIONS ±1/64
DECIMALS ±.005
ANGLES ±2°

WIRING DEVICE-KELLEMS
HUBBELL INCORPORATED
BRIDGEPORT, CT

DR. BY CAC | APP. BY RDK
TR. BY | SCALE 1:1
CHK'D BY RDK | DATE 11/03/04

DIMENSION SHEET FOR CAT. NO. SEE TABLE

REPAIRABLE ☐ NON-REPAIRABLE ☒

B

M-9571

2

CODE 74545